# 108IM Interchangeable High Frequency Horns

One Systems® offers several direct weather high performance loudspeaker systems that feature fully rotatable and interchangeable high frequency horns. The 108IM is a very high performance yet compact professional loudspeaker system that is shipped with two high frequency horns. A 60 degree by 40 degree horn is factory installed and a 105 degree by 60 degree horn is also included in the shipping carton. Both horns can be rotated to achieve optimized coverage patterns.

Because each horn produces different acoustic loading for the compression driver the 108IM passive crossover must be “re-configured” to provide both the proper crossover frequency as well as the proper amplitude shading for each horn pattern. This process is very simple and straightforward.

The following steps are to be done in order to accomplish this process:

1. To change the horn in the 108IM, first the grill must be removed.

2. Once the grill is removed the horn/driver assembly that is installed in the enclosure must be removed. Care should be taken to avoid stressing the wires that connect the compression driver to the crossover assembly.

3. Disconnect the two wires from the compression driver, observing the polarity of each wire. The orange wire is positive and the yellow wire is negative.

**NOTE:** The wiring for the ETS-60/40 horn requires the orange wire to be on the positive terminal of the compression driver and the yellow wire to be on the negative terminal.

When the ETS-105/60 horn is used the wiring must be *reversed*. (The orange wire must be on the NEGATIVE terminal and the yellow wire must be on the *positive* terminal)

4. Remove the compression driver from the horn by loosening and removing the 4 nuts that secure the driver to the horn.

5. Install the new high frequency horn on the driver and securely tighten the 4 nuts on the threaded studs. (**NOTE:** Do not over tighten the nuts!)

6. Before the new horn/driver assembly can be installed in the 108IM enclosure the internal passive crossover must be “re-configured” to provide the proper crossover frequency and electrical loading for the specific horn being installed.

As noted above there are two high frequency horns available for the 108IM, the ETS-60/40 (factory installed) and the ETS-105/60. There are *two* jumpers on the 108IM crossover printed circuit board and *both* jumpers must be moved when the high frequency horn is changed.

Please see the picture below. This illustrates the side of the printed circuit board that is seen when the high frequency horn is removed. This is seen by looking thru the hole in the 108IM enclosure where the horn was mounted. The two jumpers are shown in the picture below. As noted, *both* jumpers must be moved for proper operation.

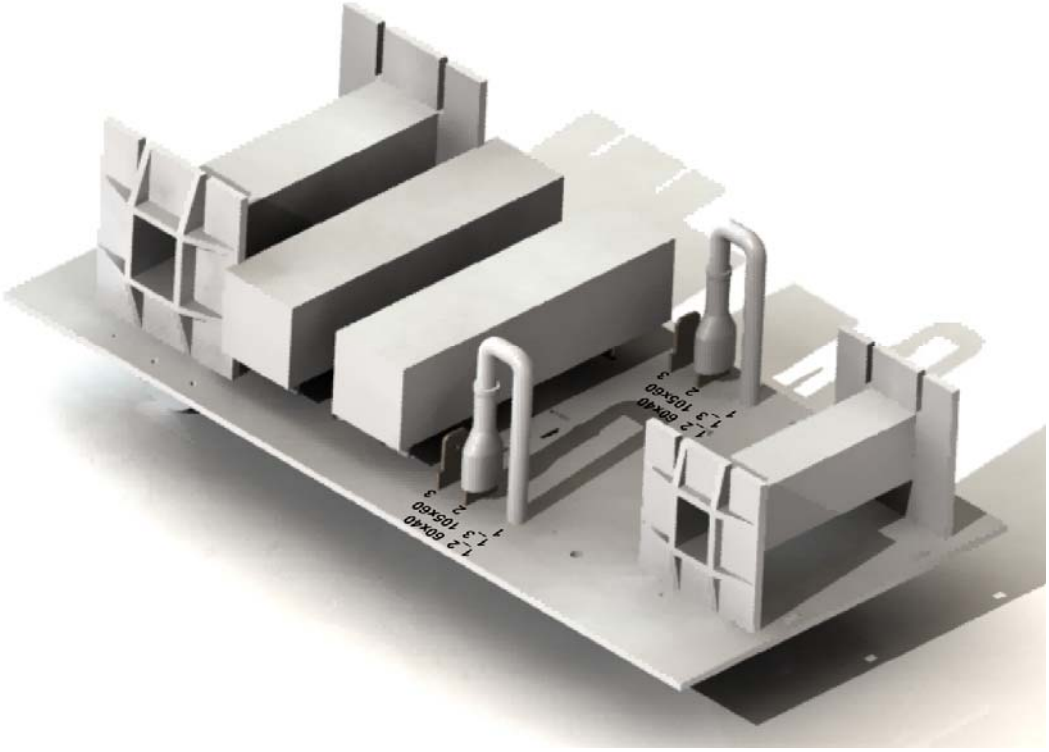


When the ETS-60x40 high frequency horn is used the two jumpers must be moved so that the jumper makes connection from position 1 to position 2. When the ETS-105x60 high frequency horn is used the jumper must be configured so that it makes connection from position 1 to position 3 on the printed circuit board.

An enlarged view of this area on the printed circuit board is shown below.

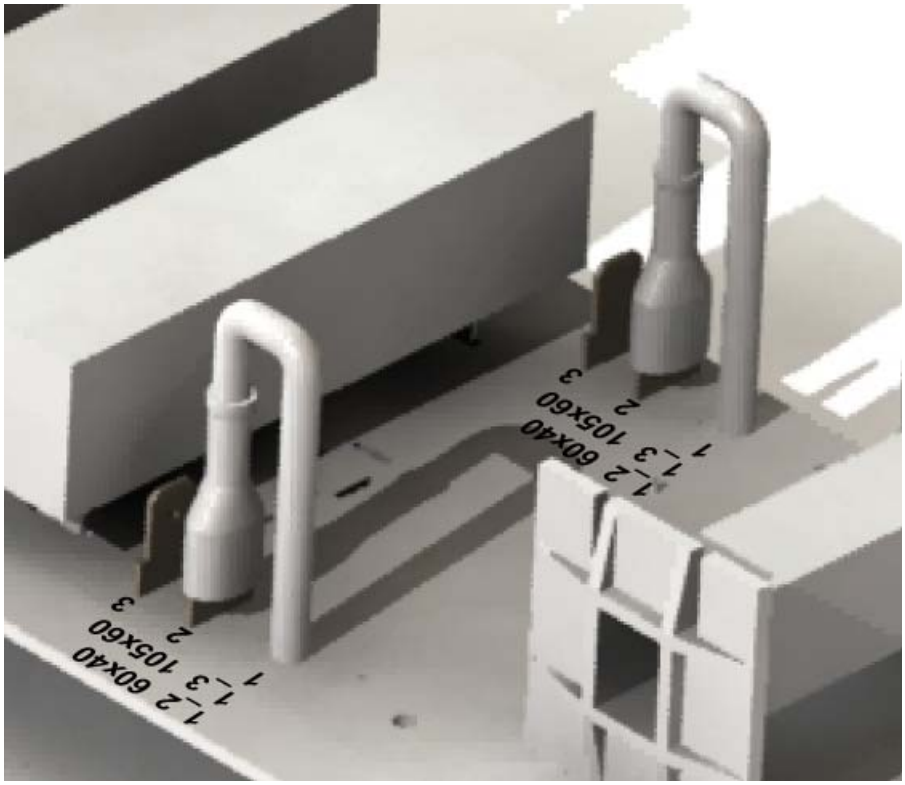


7. Once BOTH jumpers have been configured for the desired high frequency horn, the wires from the printed circuit board to the compression driver should be reconnected, making sure that you have observed the correct polarity as noted below.

**NOTE:** The wiring for the ETS-60/40 requires the orange to be on the positive terminal of the compression driver and the yellow wire to be on the negative terminal.

When the ETS-105/60 horn is used the wiring must be *reversed*. (The orange wire must be on the *negative* terminal and the yellow wire must be on the *positive* terminal).

The reverse polarity wiring for the ETS-105/60 is required to offset the signal delay associated with the shorter horn. This polarity reversal maintains comparable signal delay between the high frequency horn and the woofer.

8. The fully wired high frequency horn/driver assembly should now be mounted back in the 108IM enclosure. It is important to insure that the desired horizontal and vertical included angles of the horn be oriented relative to the enclosure. (This orientation will be determined by the required radiation pattern and the orientation of the enclosure relative to the acoustic space) Securely tighten the bolts that hold the horn/driver assembly in the 108IM, but do not over tighten them.

9. Replace the 108IM grill assembly

# SPORTS/PERFORMANCE VENUES AND VERTICAL ARRAYS

The array configurations discussed below are ideally suited for Basketball Arenas, Gymnasiums, and large multi purpose rooms. Outdoor venues such as large stadiums, race tracks, baseball stadiums, soccer fields, and open air, or shed style performing arts venues all require both long throw and down fill, or short throw sound reinforcement systems. Typical arrays and a higher performance array are discussed and examples are shown that utilize ONE SYSTEMS unique direct weather high performance sound reinforcement systems.

Medium to large format sports and performance venues often require both medium to long throw acoustic systems as well as short throw, or "down fill" systems. Many professional loudspeaker manufacturers, including ONE SYSTEMS™ offer down fill brackets or other rigging systems to allow a low acoustic Q, or short throw, loudspeaker system to be suspended under a much higher Q, or long throw array. The advantage is the ability to suspend both long throw and down fill devices from a single set of suspension points. Figure 1 represents this type of solution from ONE SYSTEMS. The resultant array is a vertical geometry that consists of a 212IM medium to long throw enclosure that features ONE SYSTEMS ET 60x40 high frequency horn. The 212IM utilizes a 2 element vertical configuration of 12 inch (305mm) direct radiator drivers in increase the vertical coverage angle and extend the rated directivity pattern in the vertical plane to below 500Hz. The ONE SYSTEMS down fill bracket, the DF-IM is used to mate the 212IM with a112IM for down fill/short throw coverage requirements. In this configuration, the 112IM uses the ET 105x60 high frequency horn to provide wide horizontal directivity in the down fill coverage area. It is a good practice to invert the down fill enclosure in order to allow all low frequency elements to be in close physical proximity. This also insures that the two high frequency horns, the 60x40 and 105x60 in this example, are many wave lengths apart.

FIGURE 1
212IM and 112IM with DF-IM Down Fill Bracket

This is a common configuration and the design is intended to provide both long throw and short throw coverage. Ideally, the system could be driven from two amplifier channels and the respective channel gains adjusted for even SPL coverage and a smooth transition between the short throw and long throw portions of the specified coverage area.

Vertical arrays of either horns or direct radiator loudspeakers are employed to narrow the vertical coverage pattern. However, when the wavelengths become comparable to or shorter than the center to center spacing of the array elements (the 12 inch loudspeakers in this case) the on-axis included angle coverage patterns become extremely narrow. As an example, the included angle of a 2x12 inch direct radiator array, as used in the 212IM, is approximately 40 degrees at 1000Hz. The implication is that using the 2x12 array any

higher than 1000Hz will produce a vertical included angle of less than 40 degrees, and compromise the front to back audience coverage in the frequency band where the 2x12 array is used above 1100Hz. Obviously, it is critical that the crossover frequency be limited to 1100Hz or below for systems such as the 212IM (or any other 2x12 loudspeaker system!)

It is common practice to view the down fill enclosure as a separate radiating element, simply providing coverage to the near audience positions. However, when the down fill loudspeaker is added to the 2x112 enclosure in a vertical array the woofer element in the down fill enclosure becomes part of the vertical array. This effect occurs when the wavelengths are comparable to or long compared to the device spacing. The implication is that from approximately 1500Hz and below, the down fill enclosure and the long throw enclosure are, in fact, one integrated three element vertical array. The best practice, as noted in the first paragraph of this paper, is to invert the lower enclosure in order to physically separate the high frequency radiating elements by many wavelengths at the crossover frequency. This spacing will prevent lobing effects generated by the two high frequency horns due to destructive interference.

Figure 2 shows the two enclosures, the 212IM and 112IM in a typical long throw/down fill configuration. The 112IM has been mounted, using the DF-IM, in an “upside down” arrangement as discussed. Using a conventional wiring configuration, one channel of an amplifier would drive the 212IM and a second channel would drive the 112IM. Both enclosures would be used in a passive, full range mode. This standard approach allows the down fill enclosure, the 112IM to be “amplitude shaded”, or turned down to match the SPL requirements of the down fill zone. This is a common approach and is found in almost all down fill/long throw system designs. Although this approach is common, it suffers from exactly the effects outlined above. Between approximately 800Hz and the down fill crossover point all three low frequency elements are working in parallel. This produces a three element vertical array and, as is the case with the typical 12 inch (305mm)diameter low frequency elements, the wavelengths become shorter than the device spacing. (Figure 2 represents the 112IM at a 30 degree down tilt angle. The DF-IM allows down tilts, in five degree increments from 0 degrees from vertical to 45 degrees.)

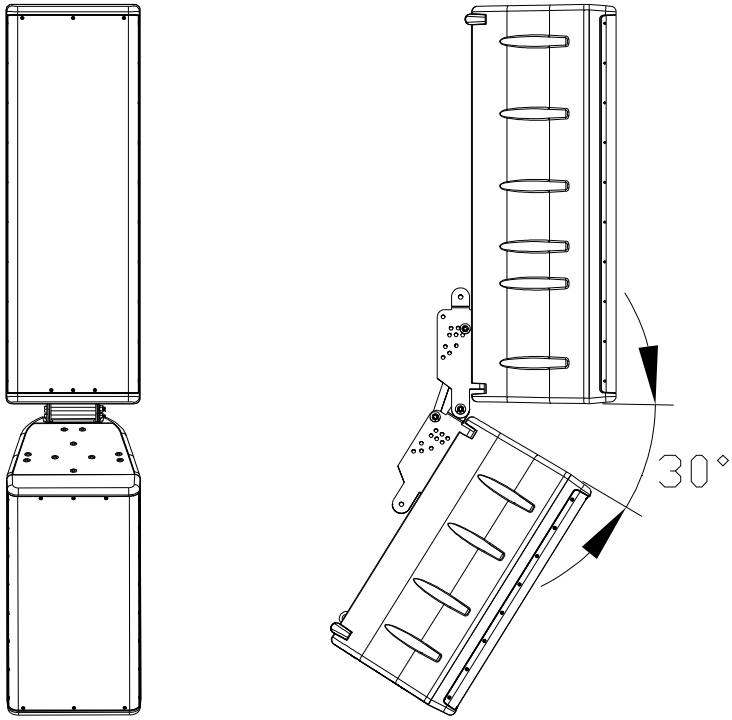


FIGURE 2
Front and Side View of 212IM and 112IM in Down Fill Configuration

The result of this “standard” down fill configuration is an undesirable vertical polar pattern. The vertical included angle at 1000Hz is now only 25 degrees! Above 1100Hz, and up to the down fill crossover frequency, the vertical pattern undergoes a variety of lobing changes. At 1250Hz the pattern presents 15 degree wide lobes that vary in amplitude by 8dB. Within a coverage angle of approximately 40 degrees there is an on axis peak and two wide -8dB dips. Using a conventional -6dB included angle to establish the rated coverage angle will result in a 20 degree rating. All of this can be a bit confusing but the good news, if there can be any, is that the bandwidth of this extreme vertical coverage narrowing is between 2/3 of an octave to 1 octave.

Fortunately, there is another method that can both take advantage of the good aspects of a three element 12 inch vertical array and eliminate the negative aspects discussed above. The physical configuration is identical to that shown in both figures 1 and 2. The specific angle necessary for the down fill enclosure, the 112IM, relative to the long throw enclosure, the 212IM, is of course a function of the array height and venue acoustic coverage requirements. In this new configuration, the ONE SYSTEMS SystemSupervisor™ is used to achieve the necessary frequency and amplitude shading.

An ideal configuration would maximize the system performance while minimizing the system complexity. The long throw enclosure, the 212IM is wired in a full range, passive, configuration just like the simple array referenced above. The down fill enclosure, however, is configured in a bi amp mode with some unique presets. The high frequency horn in the down fill enclosures, the ET 105x60 is in bi amp mode and the high pass filter, the crossover frequency, is set to 1122Hz, just as the passive filter is configured in the long throw enclosure. The 12 inch loudspeaker, however is set to function as a part of the overall array comprised of the two 12 inch speakers in the long throw enclosure and the single 12 inch speaker in the down fill enclosure.

The down fill high frequency horn has a rated coverage pattern of 105 degrees by 60 degrees. The horn is rotatable but in the array shown the horn is oriented to yield a horizontal pattern of 105 degrees. The vertical included angle is then 60 degrees. Because the included angle of the high frequency horn is 60 degrees, it is desirable to maintain this vertical angle for the low frequency/mid bass frequency band as well. (The included vertical angle of the long throw high frequency horn is 40 degrees, so maintaining a 60 degree vertical angle for the entire array represents a good compromise between the low throw section and the down fill section)

To maintain the desired vertical included angle the low pass filter in the SystemSupervisor is set to limit the bandwidth of the 12 inch loudspeaker in the 112IM to below 400Hz. The interesting aspect of this configuration is that the 12 inch loudspeaker in the 112IM is only playing from its low frequency limit to 400Hz, yet the high frequency horn in the 112IM down fill is playing from 1122Hz and above. At first glance, it would seem unusual that there is a 700Hz gap between the 12 inch woofer and the ET 105x60 high frequency horn.

This unusual condition is the result of the three element 12 inch loudspeaker array and the fact that although they are in different enclosures (the 212IM and the 112IM) they behave as a single acoustic element. The common mistake is that the two loudspeaker systems are treated as two separate acoustic elements when in fact all three 12 inch loudspeakers form a single acoustic element, independent of the fact that one of the 12 inch loudspeakers is in a different enclosure.

The next issue to address is that when the lower enclosure is tilted back to provide aiming for the ET 105x60 high frequency horn, the 12 inch loudspeaker moves back as well. This change in physical position acts to “steer” the entire 3 element array down. This occurs because as the 112IM is rotated back to provide the tilting angle necessary for the

high frequency down tilt the 12 inch speaker rotates off the vertical plane of the main three element array. This introduces a small signal delay and acts to introduce a mid bass down tilt. This can either be accepted or can be corrected by adding delay to the 212IM enclosure. This delay brings the entire three element array back into “alignment” and steers the mid bass lobe back to the desired aiming angle of the entire system. The table below (Table 1) indicates the signal delay versus down tilt angle of the 112IM and associated down tilt of the mid bass polar lobe.

| Down Tilt Angle | Signal Delay | Mid Bass Polar Lobe Tilt |
|---|---|---|
| 20 Degrees | 0.2mSec | 5 Degrees Down |
| 30 Degrees | 0.3mSec | 10 Degrees Down |
| 45 Degrees | 0.5mSec | 15 Degrees Down |

TABLE 1

The reason to be concerned about this effect is that it is important for the main mid bass array to exhibit the same basic aiming angle as the main system. As the audience gets closer to the front of the listening space the polar response acts as the reciprocal of the audience distance and tends to provide some degree of constant SPL versus distance in the array.

Now the down fill high frequency horn, the ET 105x60, is simply amplitude shaded (attenuated) to provide the required down fill sound pressure levels based on the array height and down tilt angle.

The diagram below (Figure 3) shows typical SystemSupervisor routings that will provide the proper aiming and signal delay correction for the over all system.

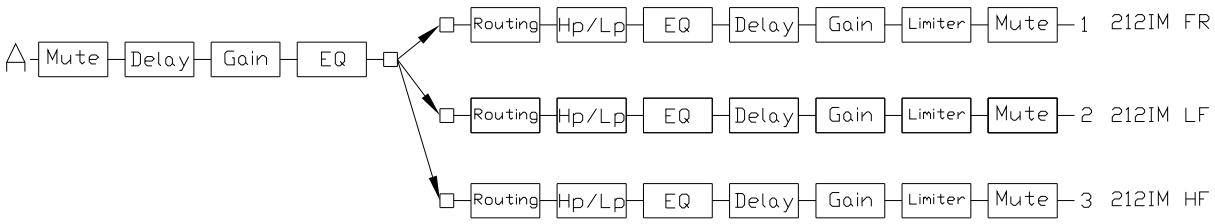


Figure 3

The block diagram above shows the 212IM being run in Full Range mode and only the post router delay is used to provide the necessary signal delay to bring the three element 12 inch array lobe back to the geometric axis of the entire system. This allows for any overall system aiming to be accomplished simply by tilting the entire array (long throw and down fill) to achieve the necessary long throw coverage. The down fill array may then be set separately to achieve the required down fill coverage. (It should also be noted that the entire system uses a high pass filter to achieve sub sonic protection. This is achieved in the high pass filter of output channel 1, the 212IM channel, as well as high pass filter in output 2, the LF section of the down fill, or 112IM channel.)

Output 2 is used to provide the frequency shading for the 112I M and output 3 is used to provide both crossover functions and the amplitude shading required to set the down fill HF level. This level is set in the post router gain function of channel 3.

The input A (1) section mute, delay, gain, and EQ are used for over all system control or for system delay if the 212IM and 112IM are in a zone that requires system delay. The over all array gain may also be set from this input section.

NOTE: The post router gain is set at the 112IM active filter preset level found in the ONE SYSTEMS web site. Post router EQ functions are also set. IN THIS APPLICATION THE EQ SHOULD NOT BE ADJUSTED IN THE POST ROUTER SETTINGS OF CHANNEL 3. HOWEVER, THE GAIN FOR THE DOWN FILL HF DRIVER IS SET HERE…..THE INSTALLER SHOULD SET THIS GAIN TO OPTIMIZE THE DOWN FILL HF LEVEL TO THE REQUIRED VALUE!

# SystemSupervisor Presets

## 212IM and 112IM with DF-IM

NOTE: Use input “A”. Output routing for outputs 1, 2, and 3 is Input 1 (input A).

### 212IM

Input A (1) Output 1

Full Range

| | | |
|---|---|---|
| Gain | | 0dB |
| | Polarity | Norm |
| Eq1 | Type | PEQ |
| | Level | 0dB |
| | Frequency | 917Hz |
| | Bandwidth | 0.562 Oct |
| Eq2 | Type | PEQ |
| | Level | 0dB |
| | Frequency | 64.3Hz |
| | Bandwidth | 0.353 Oct |

## Eq3

| | |
|---|---|
| Type | PEQ |
| Level | 0dB |
| Frequency | 1542Hz |
| Bandwidth | 0.223 Oct |

## Delay

| | |
|---|---|
| Pre Crossover | 0mSec |
| Post Crossover | See Table 1 Above<br>(set per 112IM down tilt angle) |

## Crossover

LPF

| | |
|---|---|
| Frequency | OFF |
| Type | 24dB L-R* |

HPF

| | |
|---|---|
| Frequency | 40.5 Hz<br>24dB Butterworth |

## Dynamics

| | |
|---|---|
| Threshold | +4dBu |
| Comp Ratio | 2:1 |
| Attack | 10.0mSec |

| | |
|---|---|
| Release | 200mSec |

## 112IM 105 x 60 (Down Fill Mode)

| Input A (1) | Output 2 | Output 3 |
|---|---|---|
| | LF | HF |
| Gain | 0dB | -10.0dB |
| Polarity | Norm | Norm |

NOTE: the HF level should be set for the desired down fill SPL requirements. The -10dB level referenced above may be adjusted up or down based on venue requirements.

| | | | |
|---|---|---|---|
| Eq1 | Type | PEQ | PEQ |
| | Level | -4.5dB | -3.0dB |
| | Frequency | 917Hz | 5993Hz |
| | Bandwidth | 0.562 Oct | 0.375 Oct |
| Eq2 | Type | PEQ | PEQ |
| | Level | +3.0dB | +8.5dB |
| | Frequency | 64.3Hz | 15.5kHz |
| | Bandwidth | 0.353 Oct | 0.375 Oct |
| Eq3 | Type | PEQ | PEQ |
| | Level | -2.0dB | -4.0dB |
| | Frequency | 1542Hz | 2911Hz |

| | | |
|---|---|---|
| Bandwidth | 0.223 Oct | 0.281 Oct |

## Delay

| | | |
|---|---|---|
| Pre Crossover | 0mSec | 0mSec |
| Post Crossover | 0mSec | 0mSec |

## Crossover

| | | |
|---|---|---|
| LPF | | |
| Frequency | 400Hz | OFF |
| Type | 24dB L-R* | |
| HPF | | |
| Frequency | 40.5Hz | 1122HZ |
| Type | Butterworth | 24dB L-R |

## Dynamics

| | | |
|---|---|---|
| Threshold | +4dBu | +2dBu |
| Comp Ratio | 2:1 | 3:1 |
| Attack | 10mSec | 2mSec |
| Release | 200mSec | 125mSec |

NOTE: L-R = Linkwitz-Riley


**One Systems USA, Inc.** * 6204 Gardendale Dr. * Nashville, TN 37215
**One Systems Group Co. Ltd.** * European Division * Mittelsmoorer Strasse 12 * 28879 Grassberg German
**One Systems Global Co., Ltd**. * 87/114 Modern Town 15th Floor * Sukhumvit 63, Ekkamai Soi 3, Klongtoey, Bangkok, 1010 Thailand

# ARRAY/FLY BRACKET INSTALLATION

ONE SYTEMS® offers several Array/Fly brackets for use with its loudspeaker systems. These Array/Fly brackets provide an easy and safe method of configuring and suspending simple planar arrays.

There are two basic bracket designs. One is a simple design consisting of two stainless steel brackets that provide a one deep planar array for multiple enclosures. The second Array/Fly bracket is a “T” style design for larger planar arrays and is designed to support increased weight. The “T” bracket is designed for use when additional enclosures are suspended below selected ONE SYSTEMS enclosures using the downfill bracket (DF-IM)

The following ONE SYSTEMS may be mounted using a product specific Array/Fly bracket:

112IM

212IM

212CIM

212Sub-W

115TW

118Sub-W

The FLY-112IM or FLY-112IM-T Array/Fly bracket is used to support 112IM, 212IM, 212CIM and 212Sub-W enclosures in both simple and “T” bracket configurations.
The 115TW or 115TW-T Array/Fly bracket is used to support the 115TW enclosure and the 118SW in both simple and “T” bracket configurations.

WARNING: The FLY-112IM Array/Fly bracket and FLY-115TW Array/Fly brackets are designed to support a single row of the specified loudspeakers only. When the FLY-112IM or FLY-115TW are used additional loudspeakers mounted under the main hang is

not permitted. A additional row of loudspeakers may be mounted under the top row by using the “T” style bracket and the DF-IM down fill bracket only. This bracket is for use with the 212IM, 112IM, and 212CIM only. If an additional row of enclosures is to be suspended below the top enclosures the individual structural ratings of each enclosure and the maximum allowable suspended weight must be strictly observed. Failure to observe these structural ratings may result in personal injury or death!

WARNING: Please read and understand all portions of the “Rigging and Suspension of ONE SYSTEMS Products” article. (www.ONESYSTEMS.COM)

WARNING: All local and national codes must be observed when suspending this product. Consult a professional rigger and structural engineer experienced in suspension of these products. Consult a professional rigger familiar with the appropriate local and national codes.

WARNING: All mating surfaces (i.e. ceilings, structural beams, etc) must be capable of supporting the Array/Fly bracket and loudspeaker weight as well as all additional rigging and provide the associated safety factors as required by local and national codes.

WARNING: Do not substitute the specific Array/Fly bracket. Do not use the specific Array/Fly bracket on any enclosure except for the enclosure specified. Do not suspend the enclosure with any Array/Fly bracket except for the specified Array/Fly bracket.

WARNING: All associated rigging the responsibility of others.

ONE SYSTEMS is not responsible for failures related to non-compliance with local and national codes and safe suspension practice.

# INSTALLATION INSTRUCTIONS

**FLY-112IM Array/Fly bracket: Simple assembly**

Note: This assembly is for arraying two 112IM enclosures, two 212IM enclosures or two 212CIM enclosures. Additional enclosures (of the same type) may be joined using the same procedure. The 112IM Array/Fly bracket is designed to suspend a single row of the specified loudspeakers only. Do not use loudspeaker enclosures of unequal heights. Use only two (or more) 112IM loudspeakers or two, two or more 212CIM loudspeakers or two or more 212IM loudspeakers. Under no circumstances should additional rows of loudspeakers be suspended below the top row!

1. See the product view below.

Each Simple Array/Fly bracket kit consists of the following:

1 ea. Angled Front bracket
1 ea. Angled Rear bracket

1 ea. Flat Front bracket
1 ea. Flat Rear bracket
8 ea. M10 x 40mm stainless steel bolts
8 ea. Stainless steel internal tooth lock washers

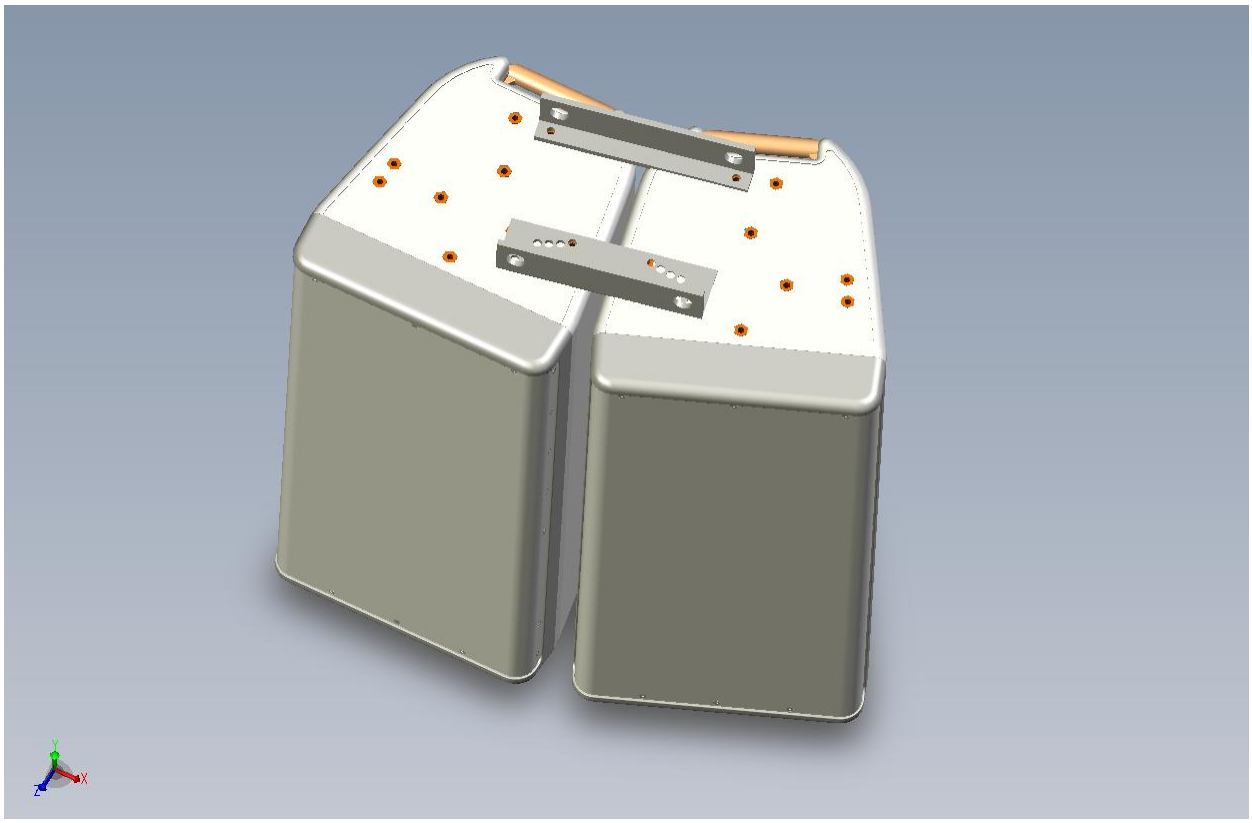

Front view of 112IM’s with Simply Fly bracket

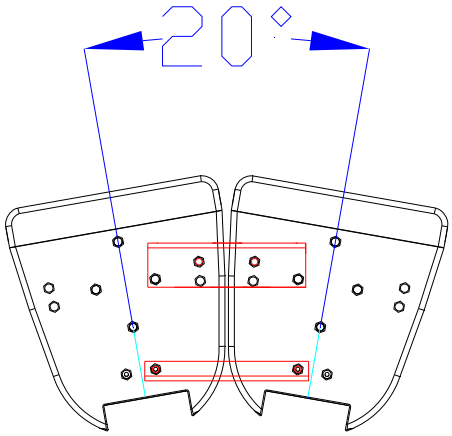


Top view of 112IM's with simple fly brackets

2. Remove the 4 M10 bolts from the positions as shown. Two each are removed from each loudspeaker enclosure (top).

3. Place the enclosures to be connected upright as shown. Connect the angled rear bracket to the M10 mounting locations on the enclosure as shown, using the supplied stainless steel bolts and internal tooth lock washers as shown. Tighten the M10 bolts. Do not substitute any mounting hardware.

4. Connect the angled front bracket, using the appropriate mounting locations to insure the proper aiming angle. Use the supplied stainless steel M10 bolts and internal tooth lock washers as shown.Tighten the M10 bolts Do not substitute any mounting hardware.

Refer to the Aiming diagram for specific hole locations in the front bracket for aiming. To achieve the specific included angles see the table below: ( This table applies to multiple 112IM's, 212IM's and 212CIM's.

| Front bracket hole location | Included angle |
|---|---|
| 1, 10 | 20 degrees |
| 2, 11 | 25 degrees |
| 3, 12 | 30 degrees |
| 4, 13 | 35 degrees |
| 5, 14 | 40 degrees |
| 6, 15 | 45 degrees |
| 7, 16 | 50 degrees |
| 8, 17 | 55 degrees |
| 9, 18 | 60 degrees |

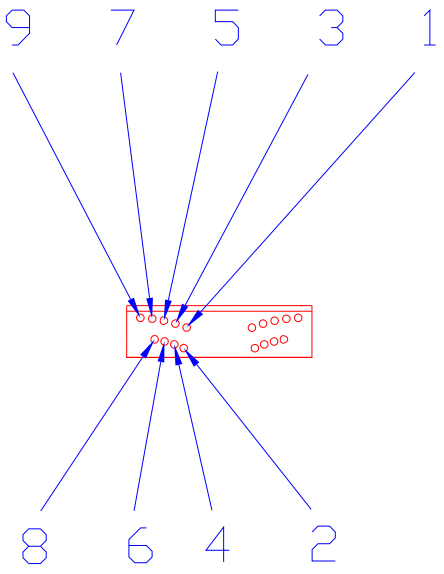


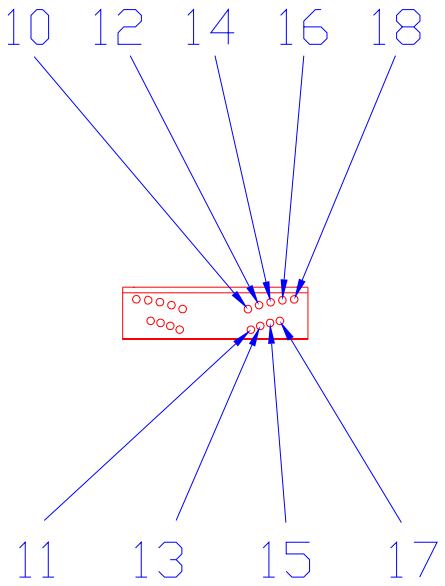


Mounting locations for front angled bracket FLY-112IM

5. Carefully tilt the two loudspeakers on to their backs (this should be done on a level and hard surface on the ground).

6. Mount the flat rear bracket to the appropriate M10 mounting locations on the bottom of the loudspeaker. Tighten the M10 bolts and insure that the lock washers have been used.

7. Mount the flat front bracket to the appropriate M10 mounting locations on the loudspeaker. Select the proper hole locations to insure the desired splay between the two loudspeakers. Tighten the M10 bolts and insure that the lock washers have been used.

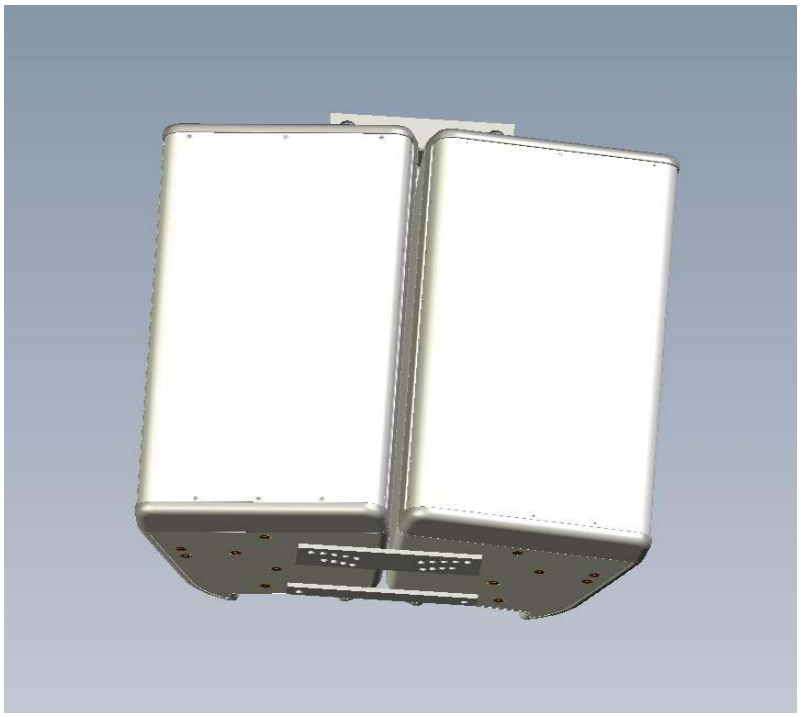

View of flat front and flat rear brackets

8. Carefully tilt the multi enclosure assembly up and into position for suspension. Double check all bolts for proper installation and insure that all bolts have been tightened.

   (OR, SEE ALTERNATE METHOD BELOW)

(ALTERNATE METHOD Steps 5a thru 8a may be used in place of steps 5 thru 8 above.)

WARNING: insure that the top bolts and lock washers are secure and tight before lifting off the ground

5a. Suspend the array to a height that will allow convenient access to the bottom of the loudspeakers.

6a. Mount the flat rear bracket to the appropriate M10 mounting locations on the loudspeaker. Tighten the supplied M10 bolts

7a. Mount the flat front bracket to the appropriate M10 mounting locations on the loudspeaker. Tighten the supplied M10 bolts.

8a. Tighten all bolts on the front and back brackets for both the top and bottom portions of the loudspeaker enclosure

9. Complete the installation using the appropriate associated rigging to insure proper safe working loads.

**NOTE:** Two 212IM enclosures may be mounted as noted above and below using either the FLY-112IM or FLY-112IM-T. In addition, the DF_IM down fill bracket may be used to suspend a single 112IM below each 212IM enclosure. In this configuration the Fly-DF brackets are used to provide structural control to the bottom portion of the 212IM enclosures. The FLY-112IM cannot be used due to the 90 degree bend in the simple bracket structure. The FLY-DF brackets should be used on the bottom of the 212IM enclosures only.

## FLY-112IM Array/Fly bracket (simple assembly) with 212SW Subwoofer Added

Note: Two 112IM or 212CIM enclosures may be arrayed with a single 212Sub-W subwoofer mounted between the two flanking loudspeaker enclosures. The 212Sub-W is the same height as the 112IM or the 212CIM so a single 212Sub-W may be mounted between two identical flanking loudspeakers (i.e. two 112IM's or two 212CIM's).

1. Each Simple Array/Fly bracket kit consists of the following:
   2 ea. Angled Front brackets
   2 ea. Angled Rear brackets
   2 ea. Flat Front brackets
   2 ea. Flat Rear brackets
   16 ea. M10 x 40mm stainless steel bolts
   16 ea. Stainless steel internal tooth lock washers

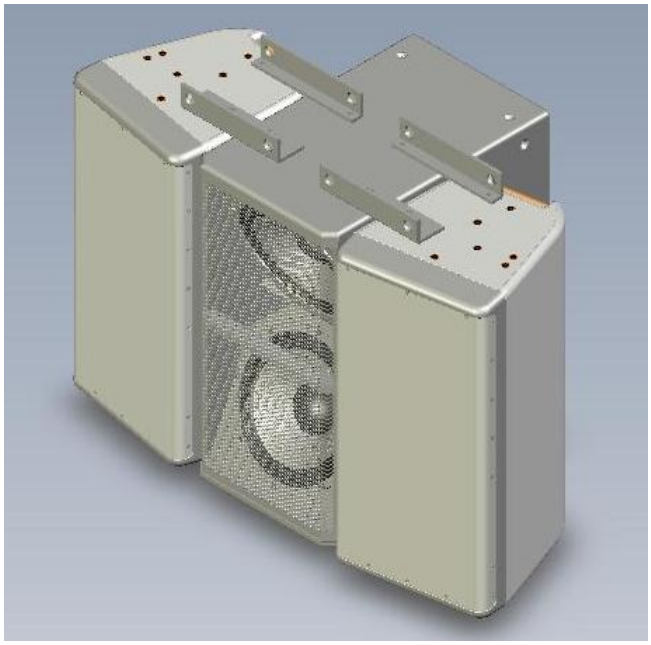

112IM’s with 212Sub-W and Simple Fly brackets

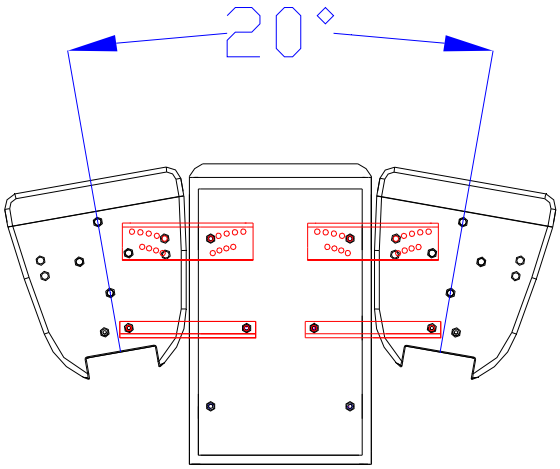


Top view of 2 112IM’s using FLY-112IM
with angled front and angled rear brackets

2. Remove the 4 M10 bolts from the positions as shown (Figure 2). Two each are removed from each loudspeaker enclosure (top).

3. Place the enclosures to be connected upright as shown. The first step should be to connect the flanking loudspeaker enclosure (either a 112IM or a 212CIM) to the 212Sub-W subwoofer. Connect the angled rear bracket to the M10 mounting locations on the enclosure as shown, using the supplied stainless steel bolts and internal tooth lock washers as shown. Tighten the M10 bolts. Do not substitute any mounting hardware.

4. Connect the angled front bracket, using the appropriate mounting locations to insure the proper aiming angle. Use the supplied stainless steel M10 bolts and internal tooth lock washers as shown. Tighten the M10 bolts Do not substitute any mounting hardware.

5. The steps in 3 and 4 must be repeated again. The second flanking loudspeaker enclosure should be connected to the other side of the 212Sub-W subwoofer.

Refer to the Aiming diagram for specific hole locations in the front bracket for aiming. This table should be understood as the array is viewed from the top. The 212SW subwoofer will be in the center. Because two simple Array/Fly bracket assemblies are used the table below must refer to both the left flanking and right flanking loudspeaker enclosures. To achieve the specific included angles see the table below:

| Front bracket hole location | | Included angle |
|---|---|---|
| Left Flanking | Right Flanking | |
| 1,1 | 1,10 | 20 degrees |
| 2,1 | 1,11 | 25 degrees |
| 3,1 | 1,12 | 30 degrees |
| 4,1 | 1,13 | 35 degrees |
| 5,1 | 1,14 | 40 degrees |
| 6,1 | 1,15 | 45 degrees |
| 7,1 | 1,16 | 50 degrees |
| 8,1 | 1,17 | 55 degrees |
| 9,1 | 1,18 | 60 degrees |

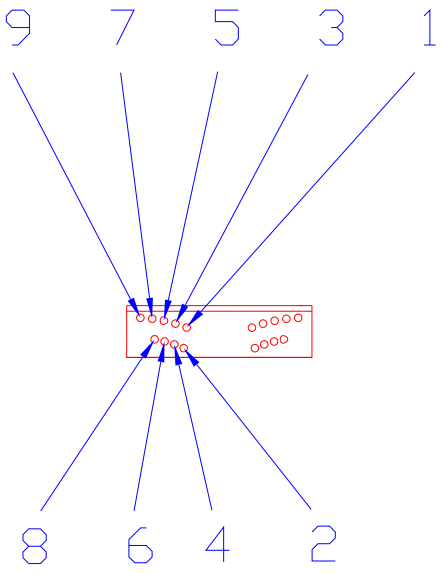


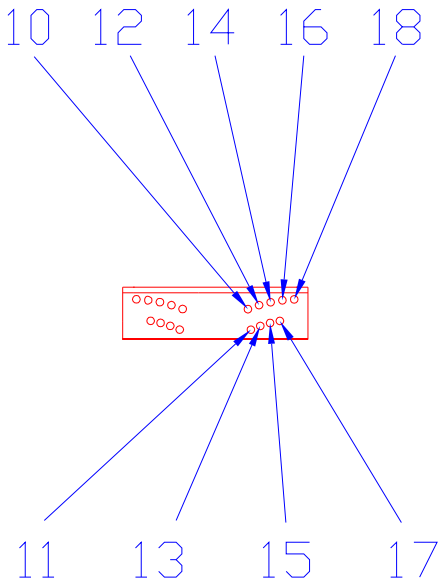


Mounting locations for front angled bracket FLY-112IM

6. Mount the flat rear brackets to the appropriate M10 mounting locations

7. Suspend the array to a height that will allow convenient access to the bottom of the loudspeakers.

   WARNING: Insure that the top M10 bolts and lock washers are secure and tightened prior to lifting.

8. Mount the flat rear brackets to the appropriate M10 mounting locations in order to unitize the two flanking loudspeakers to the center 212Sub-W subwoofer. Tighten the supplied M10 bolts

9. Mount the flat front brackets to the appropriate M10 mounting locations in order to unitize the two flanking loudspeakers to the center 212Sub-W subwoofer. Tighten the supplied M10 bolts

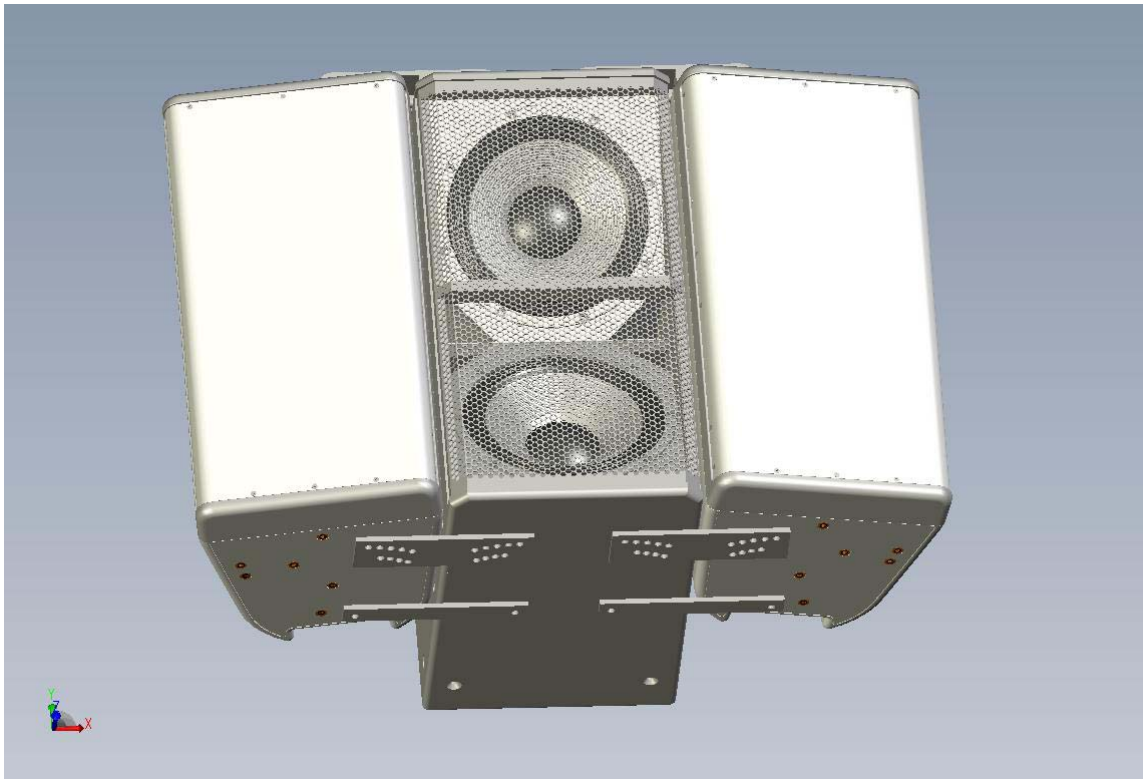

Bottom view of flat front and flat rear brackets

10. Tighten all bolts on the front and back brackets for both the top and bottom portions of the loudspeaker enclosure

11. Complete the installation using the appropriate associated rigging to insure proper safe working loads.

**112IM-T Array/Fly bracket: "T" Assembly**

Note: This assembly is for arraying two 112IM enclosures, two 212IM enclosures or two 212CIM enclosures. Additional enclosures (of the same type) may be joined using the same procedure. The FLY-112IM Array/Fly bracket is designed to suspend a single row of the specified loudspeakers only. Do not use loudspeaker enclosures of unequal heights. Use only two (or more) 112IM loudspeakers or two, two or more 212CIM loudspeakers or two or more 212IM loudspeakers.

1. See the product view below.

   Each "T" Array/Fly bracket kit consists of the following:
   - 1 ea. FLY-112IM "T" bracket
   - 4 ea. "T" bracket metal spacer/washers
   - 1 ea. Flat Front bracket
   - 1 ea. Flat Rear bracket
   - 8 ea. M10 x 40mm stainless steel bolts
   - 8 ea. Stainless steel internal tooth lock washers

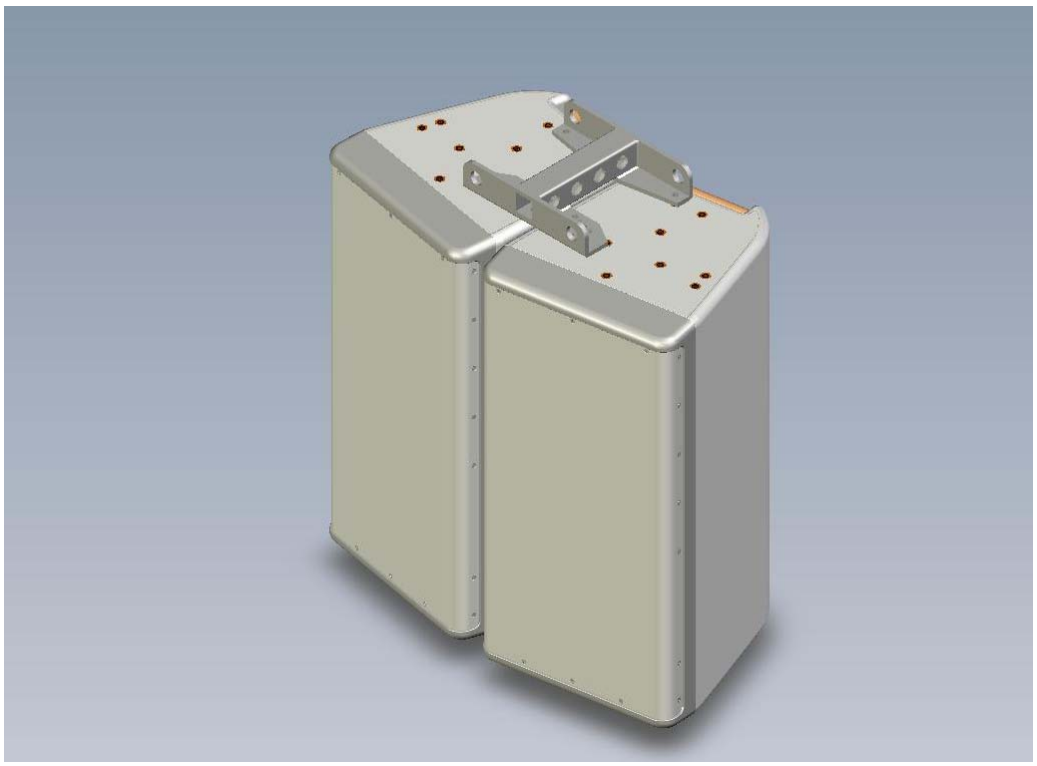

Front View of 112IM's with "T" Fly bracket

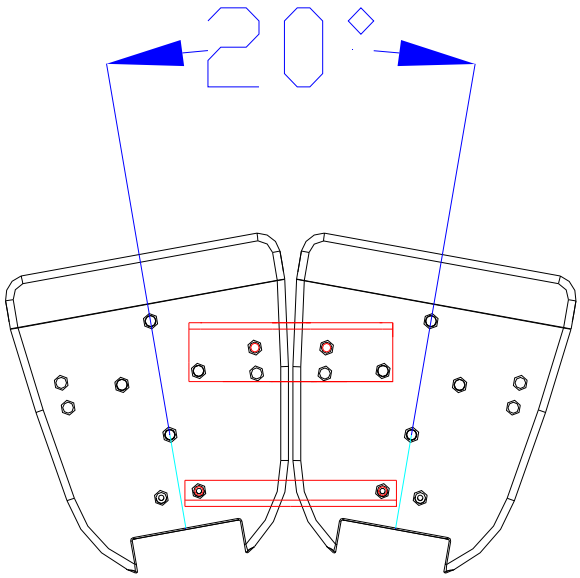


Top view of 2 112IM's with FLY-112IM-T bracket

2. Remove the 4 M10 bolts from the positions as shown (Figure 2). Two each are removed from each loudspeaker enclosure (top).

3. Place the enclosures to be connected upright as shown. Connect the "T" bracket to the M10 mounting locations on the enclosure as shown, using the supplied stainless steel bolts and internal tooth lock washers as shown. The "T" bracket metal spacer/washers must be located, 1 ea., between the "T" bracket and the loudspeaker enclosure. These metal spacer/washers act to level the "T" Array/Fly bracket due to the structural bolts protruding under the "T" Array/Fly bracket assembly. Tighten the M10 bolts. Do not substitute any mounting hardware.

4. Refer to the Aiming diagram for specific hole locations in the front bracket for aiming. To achieve the specific included angles see the table below: ( This table applies to multiple 112IM's, 212IM's and 212CIM's.

| Front bracket hole location | Included angle |
|---|---|
| 1, 10 | 20 degrees |
| 2, 11 | 25 degrees |
| 3, 12 | 30 degrees |
| 4, 13 | 35 degrees |
| 5, 14 | 40 degrees |
| 6, 15 | 45 degrees |
| 7, 16 | 50 degrees |
| 8, 17 | 55 degrees |
| 9, 18 | 60 degrees |

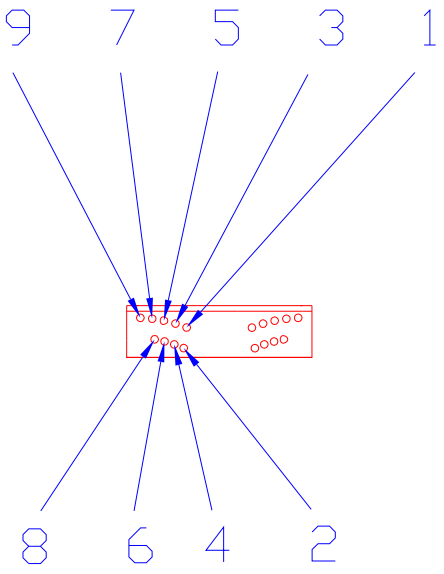


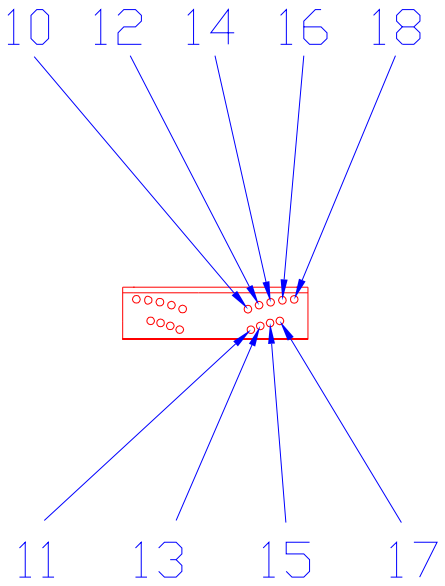


Mounting locations for angled front bracket FLY-112IM

5. Carefully tilt the two loudspeakers on to their backs. This must be done on a flat and level surface on the ground

6. Mount the flat rear bracket to the appropriate M10 mounting locations the loudspeakers insuring that the lock washers have been used. Tighten the bolts

7. Mount the flat front bracket to the appropriate M10 mounting locations on the loudspeakers. Tighten the supplied M10 bolts, insuring that the lock washers have been used. The enclosures may now be tilted back to an upright position

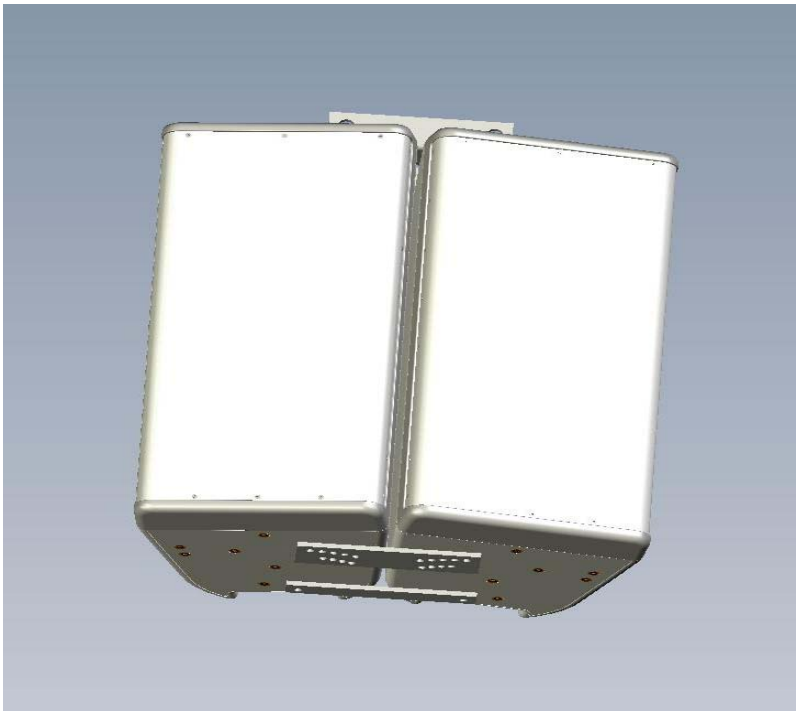

View of flat front and flat rear brackets

8. Check all bolts for proper installation and tighten again.

   ALTERNATE METHOD
   (steps 5a thru 8a may be substituted for steps 5 thru 8 above)

   WARNING: Insure that all M10 bolts are secure and tight prior to lifting the array off the ground)

5a. Suspend the array to a height that will allow convenient access to the bottom of the loudspeakers.

6a. Mount the flat rear bracket to the appropriate M10 mounting locations on the loudspeakers. Tighten the supplied M10 bolts insuring that the lock washers have been used

7a. Mount the flat front bracket to the appropriate M10 mounting locations on the loudspeakers. Tighten the supplied M10 bolts insuring that the lock washers have been used.

8a. Tighten all bolts on the front and back brackets for both the top and bottom portions of the loudspeaker enclosure

9. Complete the installation using the appropriate associated rigging to insure proper safe working loads.

**FLY-112IM Array/Fly bracket ('T' assembly) with 212Sub-W Subwoofer Added**

Note: Two 112IM or 212CIM enclosures may be arrayed with a single 212Sub-W subwoofer mounted between the two flanking loudspeaker enclosures. The 212Sub-W is the same height as the 112IM or the 212CIM so a single 212Sub-W may be mounted between two identical flanking loudspeakers (i.e. two 112IM's or two 212CIM's).

1. See product view below

Each Simple Array/Fly bracket kit consists of the following:
2 ea. FLT-112IM Array/Fly "T" bracket
8 ea. "T" bracket metal spacer/washers
2 ea. Flat Front brackets
2 ea. Flat Rear brackets
16 ea. M10 x 40mm stainless steel bolts
16 ea. Stainless steel internal tooth lock washers

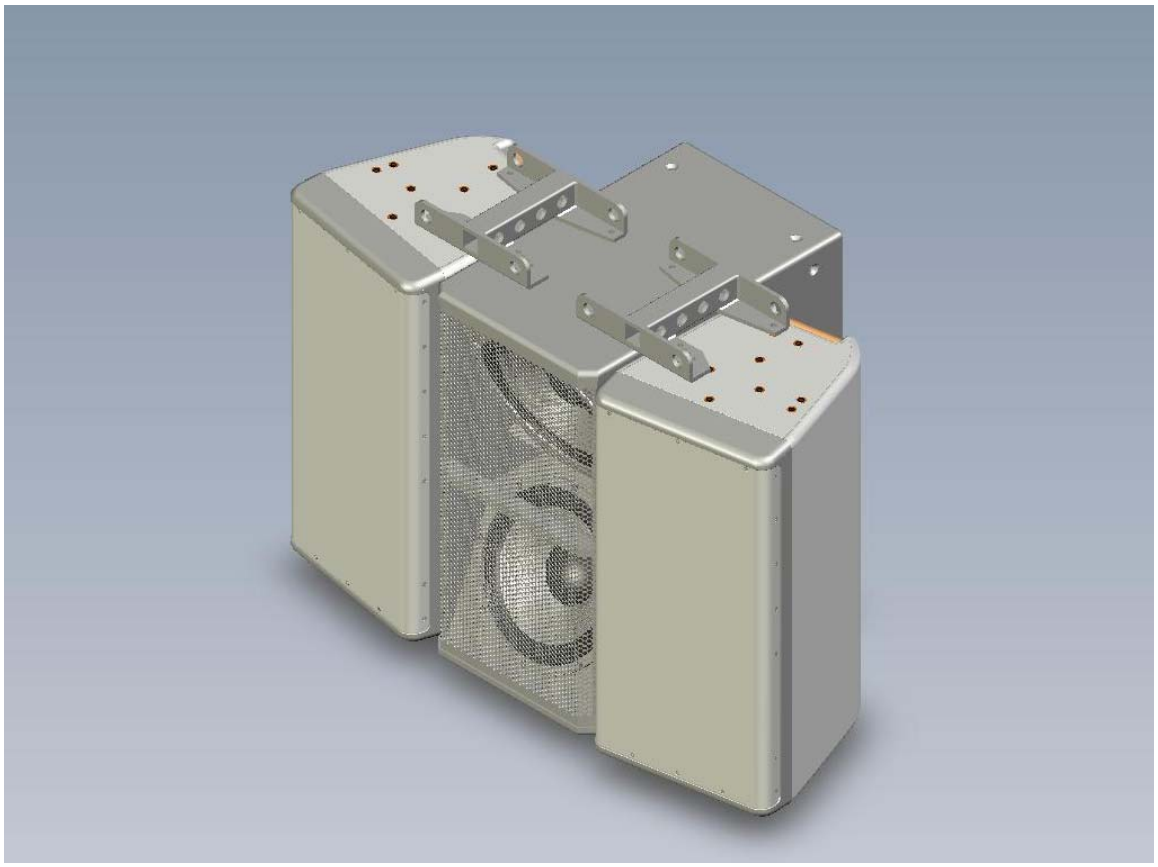

Front View of 112IM’s with 212Sub-W and “T” Fly brackets

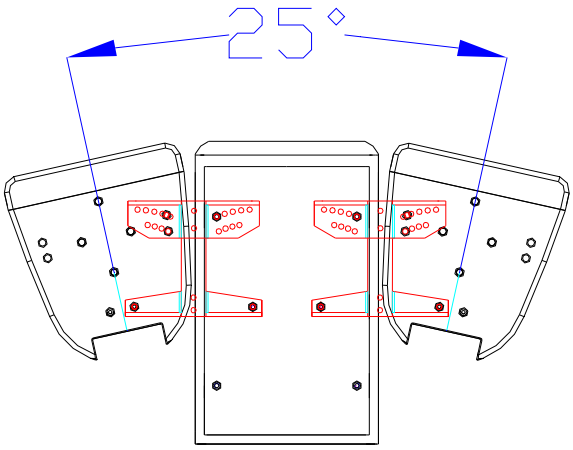


Top view of 2 112IM's and 118Sub-W
with FLY-112IM-T brackets

2. Remove the 4 M10 bolts from the positions as shown (Figure 2). Two each are removed from each loudspeaker enclosure (top).

3. Place the enclosures to be connected upright as shown. The first step should be to connect the flanking loudspeaker enclosure (either a 112IM or a 212CIM) to the 212Sub-W subwoofer. Connect the "T" bracket to the M10 mounting locations on the enclosure as shown, using the supplied stainless steel bolts and internal tooth lock washers as shown. Install the 4 ea. Metal spacer/washers between the loudspeaker enclosure and the "T" bracket. Tighten the M10 bolts. Do not substitute any mounting hardware.

4. The steps in 3 must be repeated again. The second flanking loudspeaker enclosure should be connected to the other side of the 212Sub-W subwoofer.

   Refer to the Aiming diagram for specific hole locations in the front bracket for aiming. This table should be understood as the array is viewed from the top. The 212SW subwoofer will be in the center. Because two simple Array/Fly bracket assemblies are used the table below must refer to both the left flanking and right flanking loudspeaker enclosures. To achieve the specific included angles see the table below:

| Front bracket hole location | | Included angle |
|---|---|---|
| Left Flanking | Right Flanking | |
| 1,1 | 1,10 | 20 degrees |
| 2,1 | 1,11 | 25 degrees |
| 3,1 | 1,12 | 30 degrees |
| 4,1 | 1,13 | 35 degrees |
| 5,1 | 1,14 | 40 degrees |
| 6,1 | 1,15 | 45 degrees |
| 7,1 | 1,16 | 50 degrees |
| 8,1 | 1,17 | 55 degrees |
| 9,1 | 1,18 | 60 degrees |

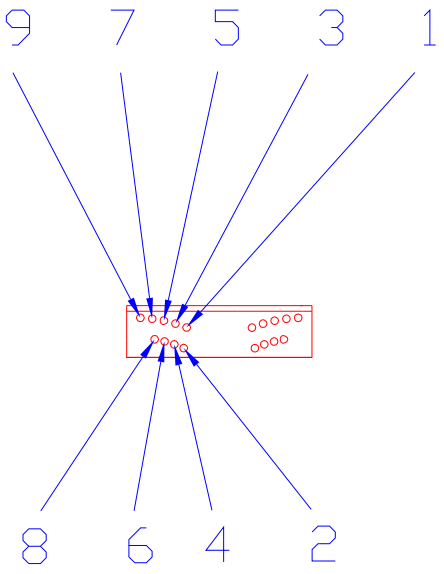


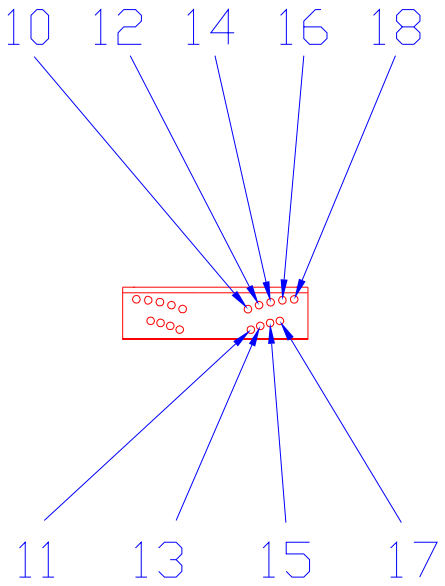


Mounting locations for angled front bracket FLY-112IM

5. Suspend the array to a height that will allow convenient access to the bottom of the loudspeakers.

6. Mount the flat rear bracket to the appropriate M10 mounting locations in order to unitize the two flanking loudspeakers to the center 212Sub-W subwoofer. Tighten the supplied M10 bolts

7. Mount the flat front bracket to the appropriate M10 mounting locations in order to unitize the two flanking loudspeakers to the center 212Sub-W subwoofer. Tighten the supplied M10 bolts

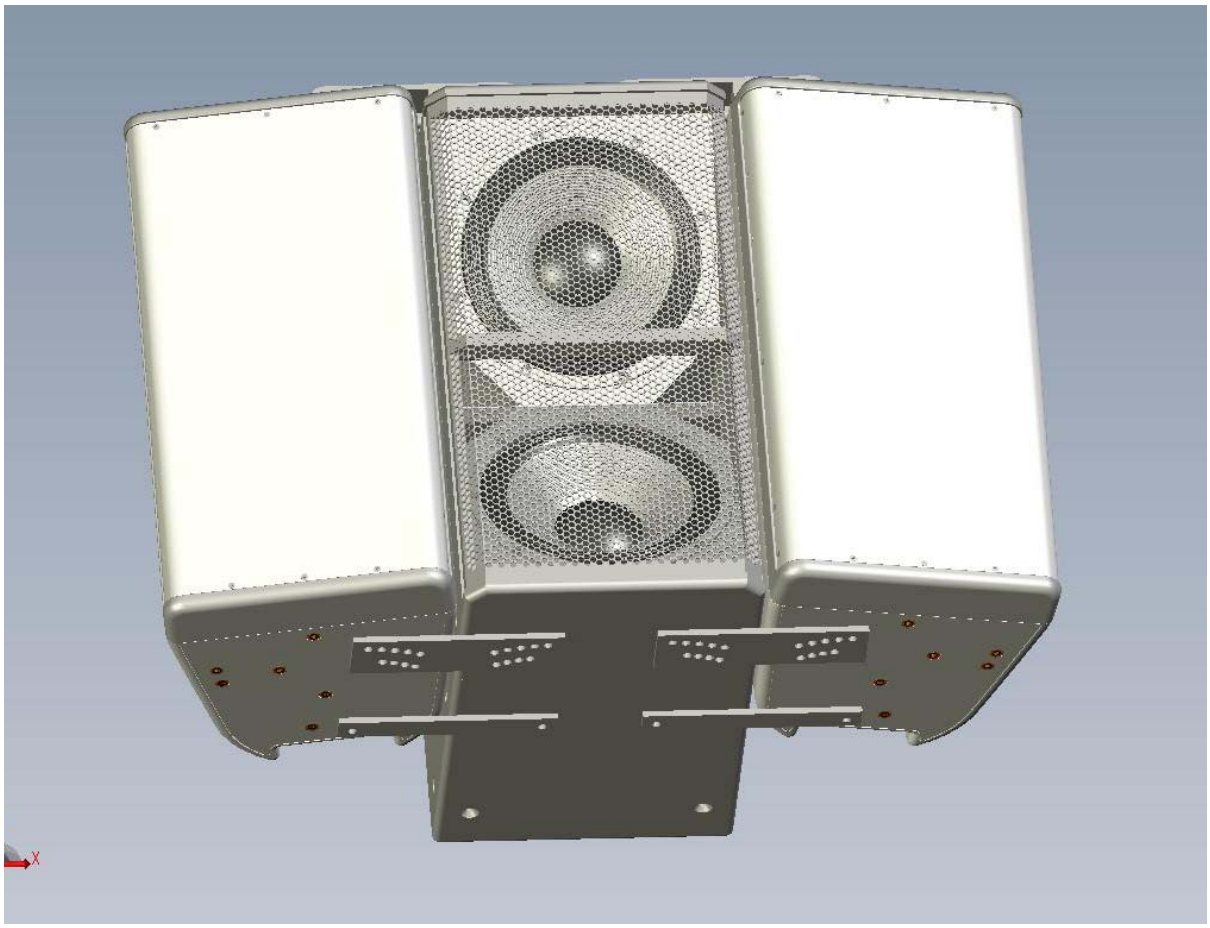

View of flat front and flat rear brackets

8. Tighten all bolts on the front and back brackets for both the top and bottom portions of the loudspeaker enclosure

9. Complete the installation using the appropriate associated rigging to insure proper safe working loads.

**FLY-115TW Array/Fly bracket: Simple Assembly**

Note: This assembly is for arraying two 115TW enclosures. Additional enclosures of the same type (115TW) may be joined using the same procedure. The FLY-115TW Array/Fly bracket is designed to suspend a single row of the specified loudspeakers only. Do not use loudspeaker enclosures or unequal heights. Under no circumstances should additional rows of loudspeakers be suspended below the top row.
WARNING: Do not suspend any other loudspeakers or objects from the 115TW loudspeakers or brackets.

1. See the product view below.

   Each Simple Array/Fly bracket kit consists of the following:
   1 ea. Angled Front bracket
   1 ea. Angled Rear bracket
   1 ea. Flat Front bracket
   1 ea. Flat Rear bracket
   8 ea. M10 x 40mm stainless steel bolts
   8 ea. Stainless steel internal tooth lock washers

115TW's with Simple Fly bracket

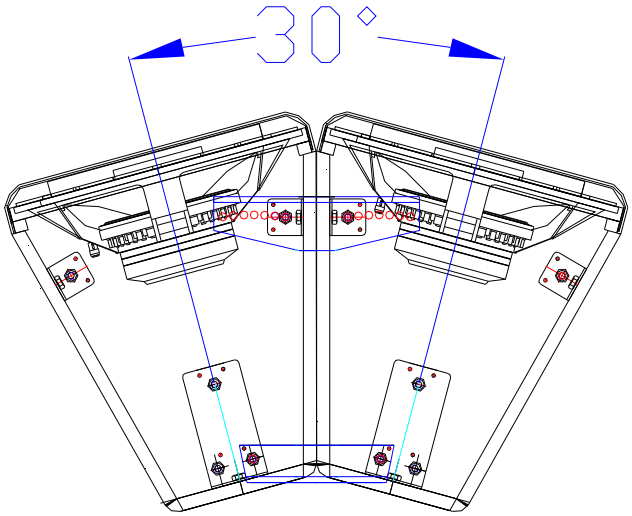


Top view of 2 115TW's with angled front and angled rear brackets

2. Remove the 4 M10 bolts from the positions as shown (Figure 2). Two each are removed from each loudspeaker enclosure (top).

3. Place the enclosures to be connected upright as shown. Connect the angled rear bracket to the M10 mounting locations on the enclosure as shown, using the supplied stainless steel bolts and internal tooth lock washers, as shown. Tighten the bolts. Do not substitute mounting hardware.

4. Connect the angled front bracket using the appropriate mounting locations to insure the proper aiming angle. Use the supplied stainless steel M10 bolts and internals tooth lock washers as shown. Tighten the M10 bolts.

   Refer to the Aiming diagram for specific hole locations in the front bracket for aiming. To achieve the specific included angles see the table below: (This table applies to multiple 115TW loudspeaker enclosures)

| Front bracket hole location | Included angle |
|---|---|
| 1, 8 | 30 degrees |
| 2, 9 | 35 degrees |
| 3, 10 | 40 degrees |
| 4, 11 | 45 degrees |
| 5, 12 | 50 degrees |
| 6, 13 | 55 degrees |
| 7, 14 | 60 degrees |

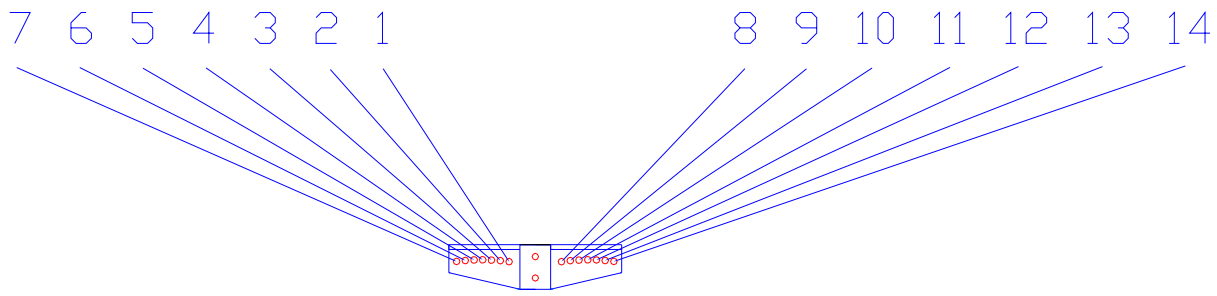


Mounting locations for angled front bracket FLY-115TW

5. Carefully tilt the two loudspeakers on to their backs (this should be done on a level and hard surface on the ground) .

6. Mount the flat rear bracket to the appropriate M10 mounting locations on the bottom of the loudspeaker. Tighten the M10 bolts and insure that the lock washers have been used.

7. Mount the flat front bracket to the appropriate M10 mounting locations on the loudspeaker. Select the proper hole locations to insure the desired splay between the two loudspeakers. Tighten the M10 bolts and insure that the lock washers have been used.

8. Carefully tilt the multi enclosure assembly up and into position for suspension. Double check all bolts for proper installation and insure that all bolts have been tightened.

   (ALTERNATE METHOD. Steps 5a thru 8a may be used in place of steps 5 thru 8 above.)
   WARNING: insure that the top bolts and lock washers are secure and tight before lifting off the ground

   5a. Suspend the array to a height that will allow convenient access to the bottom of the loudspeakers.

   6a. Mount the flat rear bracket to the appropriate M10 mounting locations on the loudspeaker. Tighten the supplied M10 bolts

   7a. Mount the flat front bracket to the appropriate M10 mounting locations on the loudspeaker. Tighten the supplied M10 bolts.

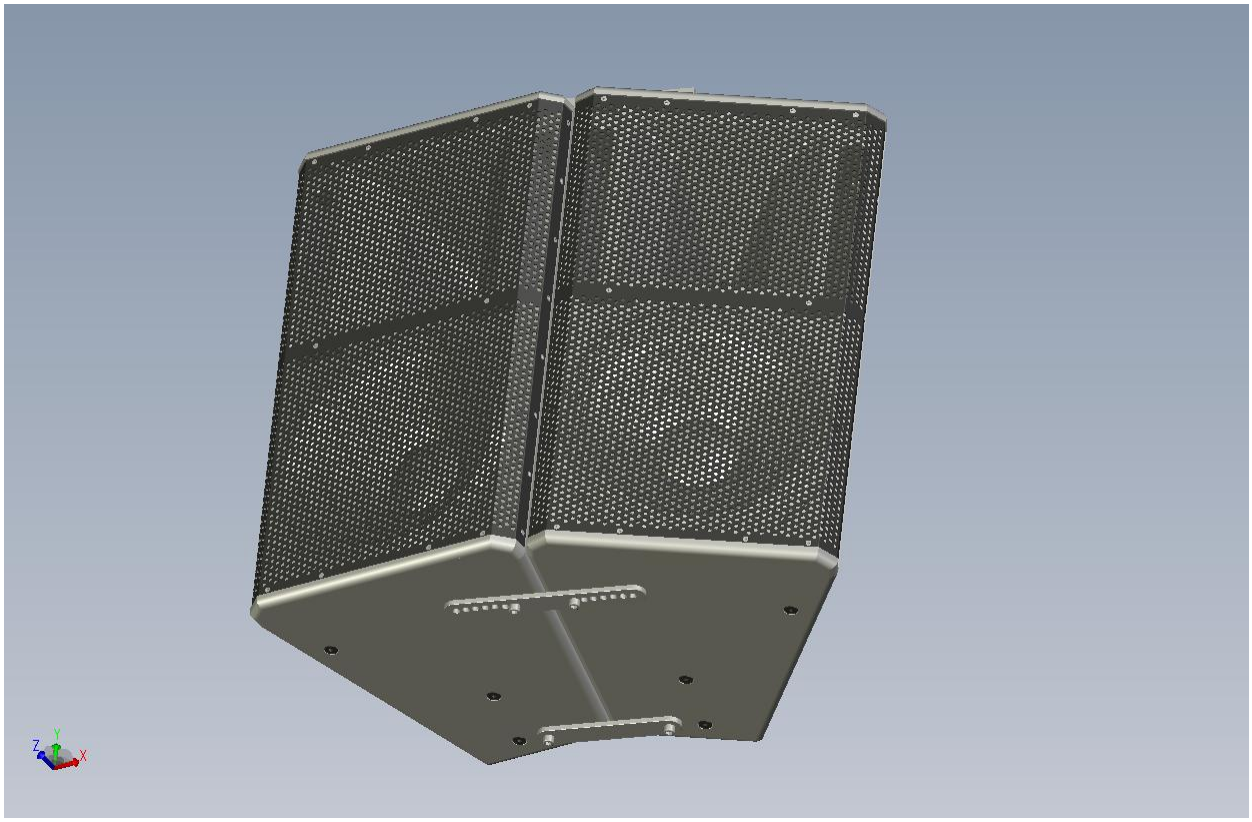

Bottom view of 2 115TW's with flat front and flat rear brackets

8a. Tighten all bolts on the front and back brackets for both the top and bottom portions of the loudspeaker enclosure

9. Complete the installation using the appropriate associated rigging to insure proper safe working loads.

**FLY-115TW Array/Fly bracket (simple assembly) with 118Sub-W Subwoofer Added**

Note: Two 115TW enclosures may be arrayed with a single 118Sub-W subwoofer mounted between the two flanking loudspeaker enclosures. The 118Sub-W is the same height as the 115TW so a single 118Sub-W may be mounted between two identical flanking loudspeakers.

1. See product view below,

Each Simple Array/Fly bracket kit consists of the following:

2 ea. Angled Front brackets
2 ea. Angled Rear brackets
2 ea Flat Front brackets
2 ea. Flat Rear brackets
16 ea. M10 x 40mm stainless steel bolts
16 ea. Stainless steel internal tooth lock washers

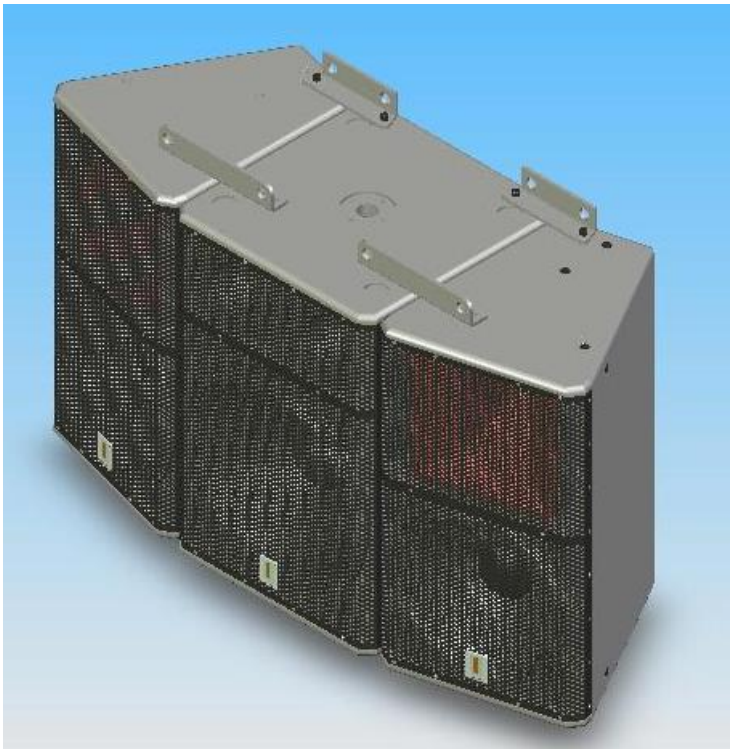

115TW’s and 118Sub-W with Simple Fly bracket

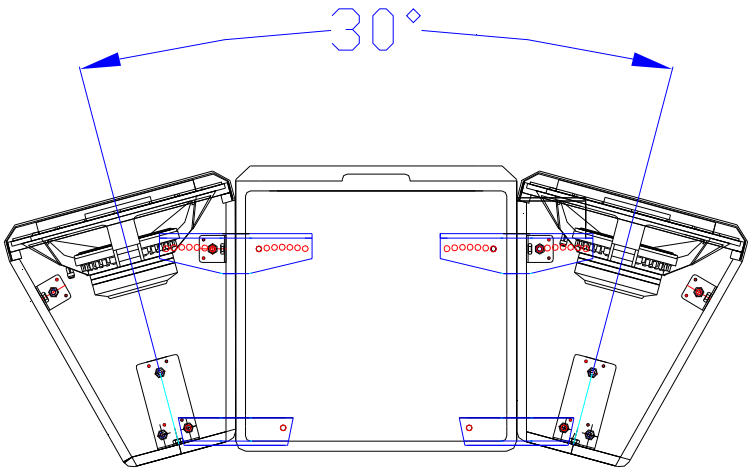


Top view of 115TW’s and 119Sub-W with angled front and angled rear brackets

2. Remove the 4 M10 bolts from the positions as shown (Figure 2). Two each are removed from each loudspeaker enclosure (top).

3. Place the enclosures to be connected upright as shown. The first step should be to connect the flanking loudspeaker enclosure ( a 115TW ) to the 118Sub-W subwoofer. Connect the angled rear bracket to the M10 mounting locations on the enclosure as shown, using the supplied stainless steel bolts and internal tooth lock washers as shown. Tighten the M10 bolts. Do not substitute any mounting hardware.

4. Connect the angled front bracket, using the appropriate mounting locations to insure the proper aiming angle. Use the supplied stainless steel M10 bolts and internal tooth lock washers as shown. Tighten the M10 bolts Do not substitute any mounting hardware.

5. The steps in 3 and 4 must be repeated again. The second flanking loudspeaker enclosure should be connected to the other side of the 118Sub-W subwoofer.

   Refer to the Aiming diagram for specific hole locations in the front bracket for aiming. This table should be understood as the array is viewed from the top. The 118Sub-W subwoofer will be in the center. Because two simple Array/Fly bracket assemblies are used the table below must refer to both the left flanking and right flanking loudspeaker enclosures. To achieve the specific included angles see the table below:

| Front bracket hole location | | Included angle |
|---|---|---|
| Left Flanking | Right Flanking | |
| 1,1 | 1,8 | 30 degrees |
| 2,1 | 1,9 | 35 degrees |
| 3,1 | 1,10 | 40 degrees |
| 4,1 | 1,11 | 45 degrees |
| 5,1 | 1,12 | 50 degrees |
| 6,1 | 1, 13 | 55 degrees |
| 7,1 | 1,14 | 60 degrees |

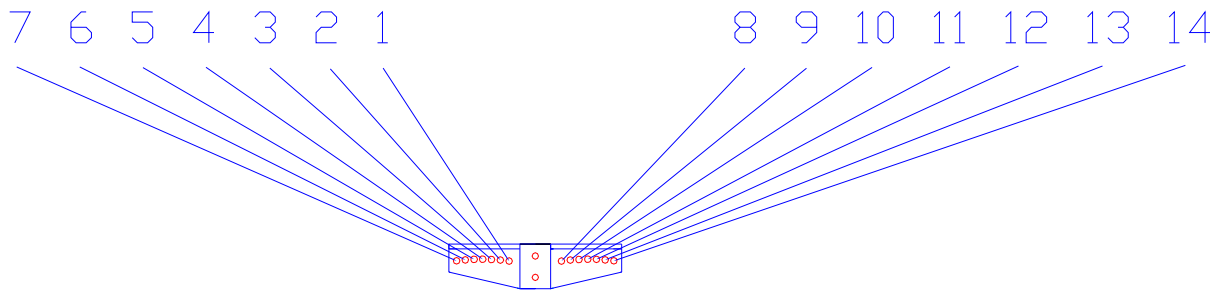


Mounting locations for Angled from bracket FLY-115TW

6. Suspend the array to a height that will allow convenient access to the bottom of the loudspeakers.

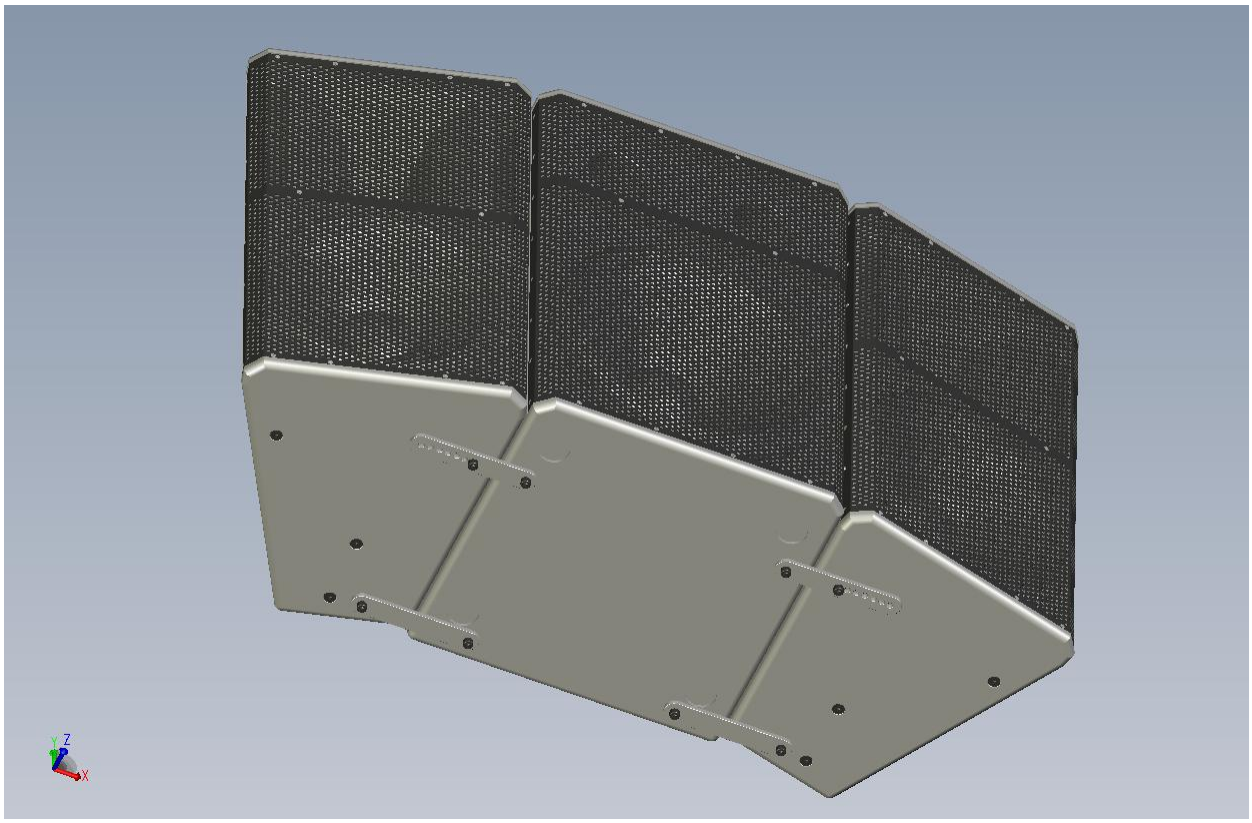

Bottom view of 2 115TW's and 118Sub-W with flat front and flat rear brackets

7. Mount the flat rear brackets to the appropriate M10 mounting locations in order to unitize the two flanking loudspeakers to the center 118SW subwoofer. Tighten the supplied M10 bolts

8. Mount the flat front brackets to the appropriate M10 mounting locations in order to unitize the two flanking loudspeakers to the center 118Sub-W subwoofer. Tighten the supplied M10 bolts

9. Tighten all bolts on the front and back brackets for both the top and bottom portions of the loudspeaker enclosure

10. Complete the installation using the appropriate associated rigging to insure proper safe working loads.

**FLY-115TW-T Array/Fly bracket: "T" Assembly**

Note: This assembly is for arraying two 115TW enclosures. Additional enclosures (of the same type) may be joined using the same procedure. The FLY-115TW-T Array/Fly bracket is designed to suspend a single row of the specified loudspeakers only. Do not use loudspeaker enclosures of unequal heights. Use only two (or more) 115TW loudspeakers.

1. See the product view below. Figure 1

   Each "T" Array/Fly bracket kit consists of the following:
   1 ea. FLY-115TW-T bracket
   4 ea. "T" bracket metal spacer/washers
   1 ea. Flat Front brackets
   1 ea. Flat Rear brackets
   8 ea. M10 x 40mm stainless steel bolts
   8 ea. Stainless steel internal tooth lock washers


Front view of 115TW’s with “T” bracket

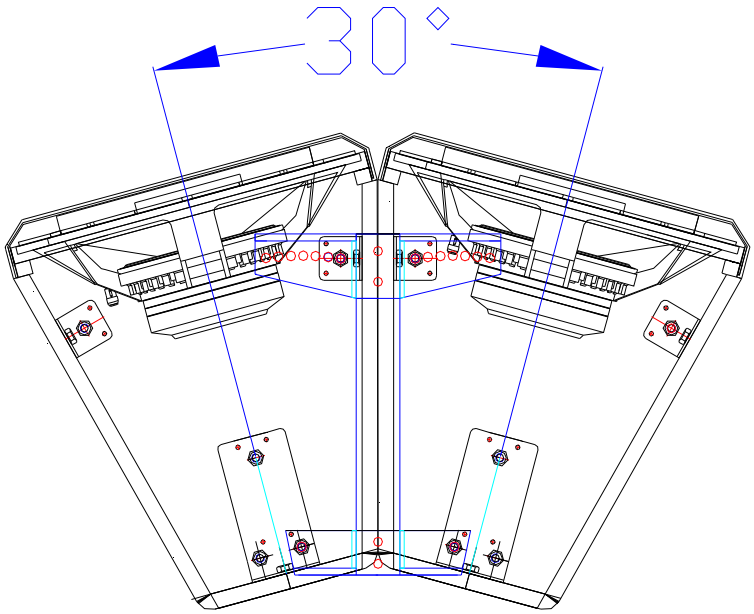


Top view of 115TW's with FLY-115TW-T

2. Remove the 4 M10 bolts from the positions as shown (Figure 2). Two each are removed from each loudspeaker enclosure (top).

3. Place the enclosures to be connected upright as shown. Connect the "T" bracket to the M10 mounting locations on the enclosure as shown, using the supplied stainless steel bolts and internal tooth lock washers as shown. The "T" bracket metal spacer/washers must be located, 1 ea., between the "T" bracket and the loudspeaker enclosure. These metal spacer/washers act to level the "T" Array/Fly bracket due to the structural bolts protruding under the "T" Array/Fly bracket assembly. Tighten the M10 bolts. Do not substitute any mounting hardware.

4. Refer to the Aiming diagram for specific hole locations in the front bracket for aiming. To achieve the specific included angles see the table below: (This table applies to multiple 115TW's).

| Front bracket hole location | Included angle |
|---|---|
| 1, 8 | 30 degrees |
| 2, 9 | 35 degrees |
| 3, 10 | 40 degrees |
| 4, 11 | 45 degrees |
| 5, 12 | 50 degrees |
| 6, 13 | 55 degrees |
| 7, 14 | 60 degrees |

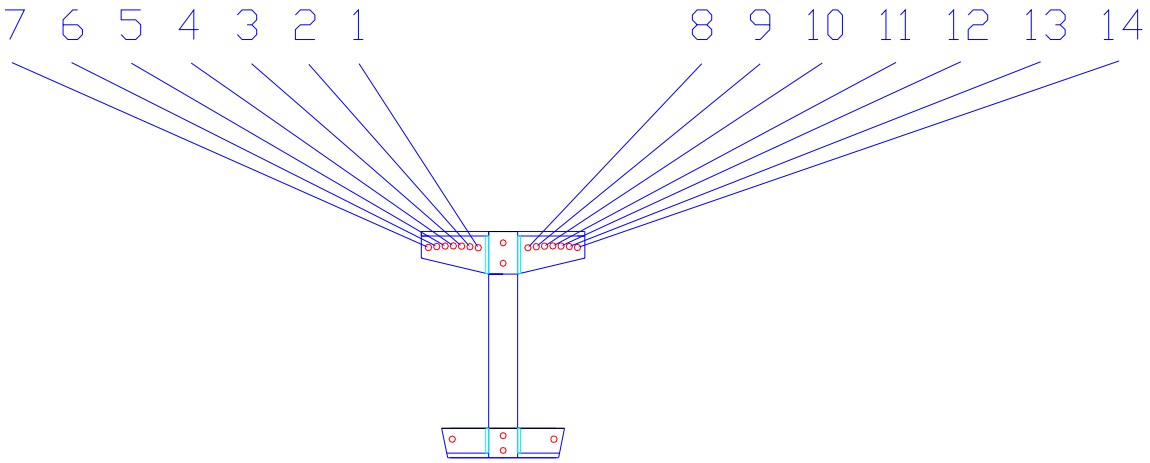


Mounting locations for FLY-115TW-T

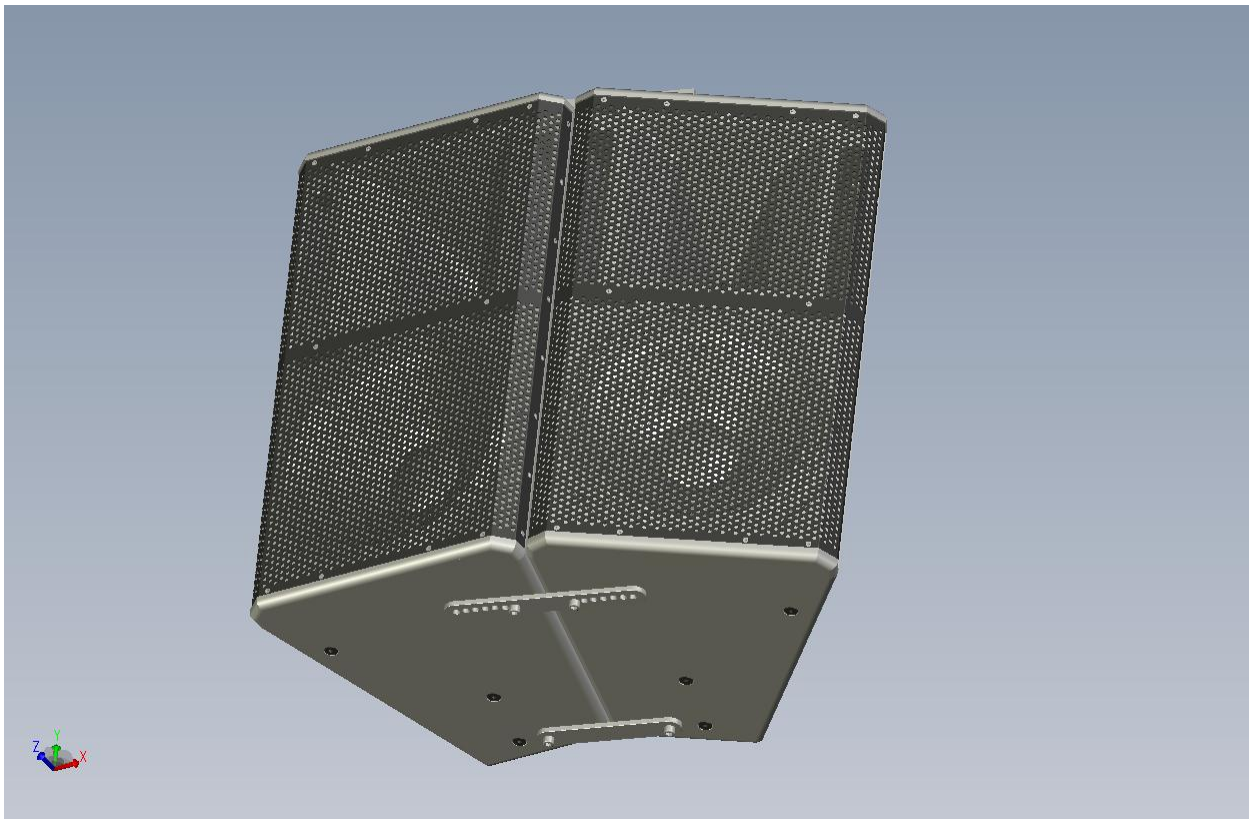

Bottom view of flat front and flat rear brackets

5. Carefully tilt the loudspeakers on to their backs. This must be done on a flat and level surface on the ground

6. Mount the flat rear bracket to the appropriate M10 mounting locations on the loudspeakers. Tighten the M10 bolts and insure that the lock washers are in place.

7. Mount the flat front bracket to the appropriate M10 mounting locations, insuring that the proper mounting holes have been selected to insure the correct splay angle of the loudspeakers. Tighten the M10 bolts and insure that the lock washers are in place.

8. Carefully tilt the enclosures back to an upright position and insure that all bolts are secure and tight.

(ALTERNATE METHOD. Steps 5a thru 8a may be used in place of steps 5 thru 8 above.)
WARNING: insure that the top bolts and lock washers are secure and tight before lifting off the ground

5a. Suspend the array to a height that will allow convenient access to the bottom of the loudspeakers.

6a. Mount the flat rear bracket to the appropriate M10 mounting locations on the loudspeakers. Tighten the supplied M10 bolts insuring the lock washers are in place.

7a. Mount the flat front bracket to the appropriate M10 mounting locations on the loudspeaker. Tighten the supplied M10 bolts

8a. Tighten all bolts on the front and back brackets for both the top and bottom portions of the loudspeaker enclosure

9. Complete the installation using the appropriate associated rigging to insure proper safe working loads.

**FLY-115TW-T Array/Fly bracket ('T' assembly) with 118Sub-W Subwoofer Added**

Note: Two 115TW enclosures may be arrayed with a single 118Sub-W subwoofer mounted between the two flanking loudspeaker enclosures. The 118Sub-W is the same height as the 115TW so a single 118Sub-W may be mounted between two identical flanking loudspeakers (i.e. two115TW's ).

1. See product view below

   Each Simple Array/Fly bracket kit consists of the following:

   2 ea. FLY-115TW-T Array/Fly “T” bracket
   8 ea. “T” bracket metal spacer/washers
   2 ea. Flat Front brackets
   2 ea. Flat Rear brackets
   16 ea. M10 x 40mm stainless steel bolts
   16 ea. Stainless steel internal tooth lock washers

Front view of 115TW’s and 118Sub-W with “T” brackets

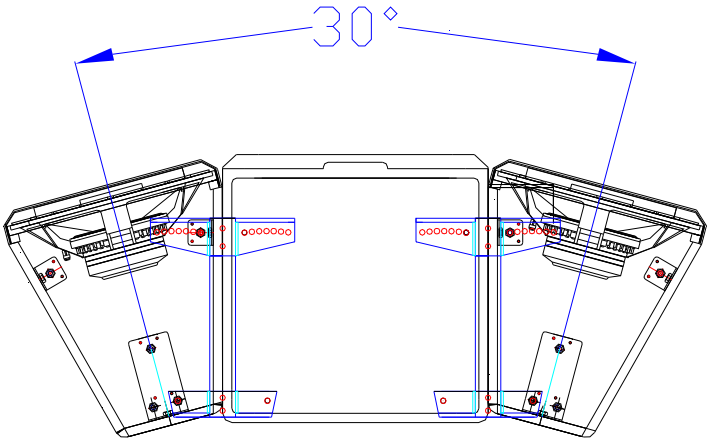


Top view of 2 115TW's and 118Sub-W with FLY-115TW-T

2. Remove the 4 M10 bolts from the positions as shown (Figure 2). Two each are removed from each loudspeaker enclosure (top).

3. Place the enclosures to be connected upright as shown. The first step should be to connect the flanking loudspeaker enclosure (a 115TW ) to the 118Sub-W subwoofer. Connect the "T" bracket to the M10 mounting locations on the enclosure as shown, using the supplied stainless steel bolts and internal tooth lock washers as shown. Install the 4 ea. Metal spacer/washers between the loudspeaker enclosure and the "T" bracket. Tighten the M10 bolts. Do not substitute any mounting hardware.

4. The steps in 3 must be repeated again. The second flanking loudspeaker enclosure should be connected to the other side of the 118Sub-W subwoofer.

5. Refer to the Aiming diagram for specific hole locations in the front bracket for aiming. This table should be understood as the array is viewed from the top. The 118Sub-W subwoofer will be in the center. Because two simple Array/Fly bracket assemblies are used the table below must refer to both the left flanking and right flanking loudspeaker enclosures. To achieve the specific included angles see the table below:

| Front bracket hole location | | Included angle |
|---|---|---|
| Left Flanking | Right Flanking | |
| 1,8 | 1,8 | 30 degrees |
| 2,9 | 2,9 | 35 degrees |
| 3,10 | 3,10 | 40 degrees |
| 4,11 | 4, 11 | 45 degrees |
| 5,12 | 5,12 | 50 degrees |
| 6,13 | 6,13 | 55 degrees |
| 7,14 | 7, 14 | 60 degrees |

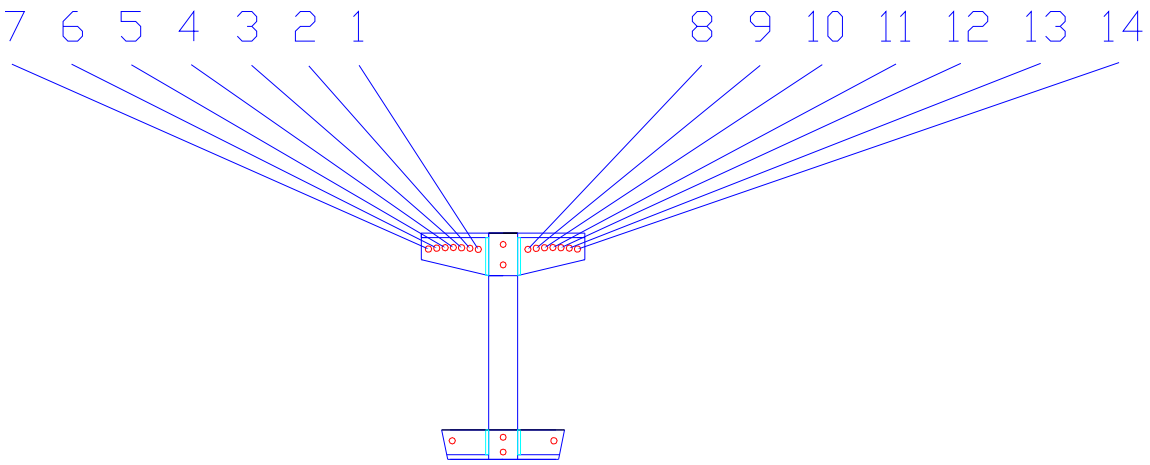


Mounting locations for FLY-115TW-T

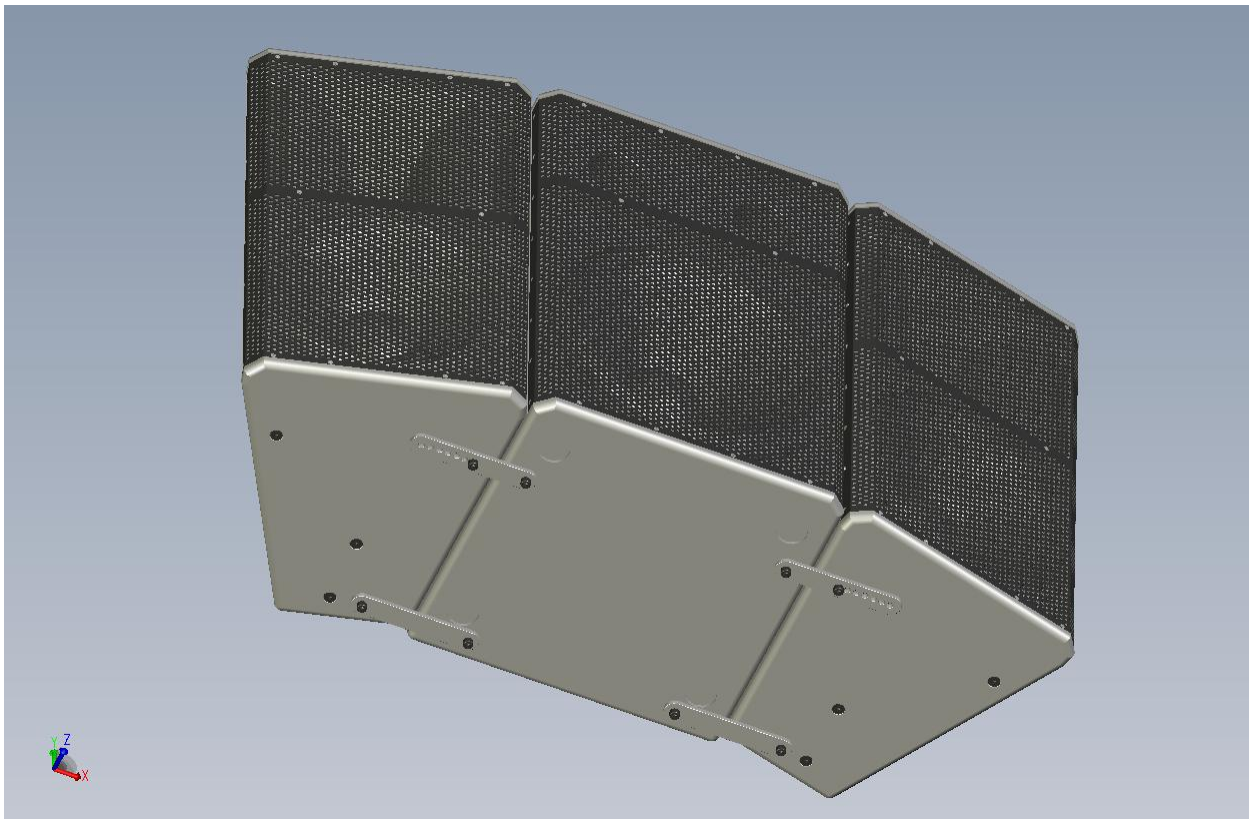

Bottom view of 2 115TW's and 118Sub-W
with flat front and flat rear brackets

6. Suspend the array to a height that will allow convenient access to the bottom of the loudspeakers.

7. Mount the flat rear bracket to the appropriate M10 mounting locations in order to unitize the two flanking loudspeakers to the center 118SW subwoofer. Tighten the supplied M10 bolts

8. Mount the flat front bracket to the appropriate M10 mounting locations in order to unitize the two flanking loudspeakers to the center 118Sub-W subwoofer. Tighten the supplied M10 bolts

9. Tighten all bolts on the front and back brackets for both the top and bottom portions of the loudspeaker enclosure

10. Complete the installation using the appropriate associated rigging to insure proper safe working loads.

**One Systems USA, Inc.** * 6204 Gardendale Dr. * Nashville, TN 37215
**One Systems Group Co. Ltd.** * European Division * Mittelsmoorer Strasse 12 * 28879 Grassberg German
**One Systems Global Co., Ltd**. * 87/114 Modern Town 15th Floor * Sukhumvit 63, Ekkamai Soi 3, Klongtoey, Bangkok, 1010 Thailand

# 112IM/212IM DOWN FILL BRACKET DF-IM

The DF-IM is a down fill bracket designed for use with the 212IM and 112IM loudspeaker enclosures. The bracket is intended to be mounted on a 212IM enclosure and a 112IM enclosure. In this configuration the 112IM should be mounted upside down and is then capable of being tilted thru a 45 degree angle in 5 degree steps.

DO NOT ATTEMPT TO SUSPEND ONE SYSTEMS PRODUCTS WITHOUT READING THE ONE SYSTEMS RIGGING MANUAL COMPLETELY. (www.ONESYSTEMS.com).

DO NOT ATTEMPT TO SUSPEND ONE SYSTEMS PRODUCTS WITHOUT UNDERSTANDING EVERY ASPECT OF THIS MANUAL.

DO NOT ATTEMPT TO SUSPEND ONE SYSTEMS PRODUCTS WITHOUT UNDERSTANDING LOCAL AND NATIONAL CODES THAT APPLY TO OVERHEAD SUSPENSION OF PRODUCTS.

DO NOT ATTEMPT TO SUSPEND ONE SYSTEMS PRODUCTS UNLESS YOU ARE A PROFESSIONAL WITH A KNOWLEDGE OF LOCAL AND NATIONAL CODES RELATED TO SAFE SUSPENSION AND ARE EXPERIENCED IN SUSPENDING PRODUCTS OVERHEAD.

ALL ASSOCIATED RIGGING THE RESPONSIBILITY OF OTHERS.

ONE SYSTEMS® is not responsible for failures related to non-compliance with local and national codes and safe suspension practice.

Figure 1 is a representation of a “long throw” 212IM with an ET- 60/40 high frequency horn. A 112IM is mounted below and has an ET105/60 high frequency horn. In the example shown in Figure 1 the 212IM is functioning as a long throw system while the 112IM is in a “short throw” configuration.

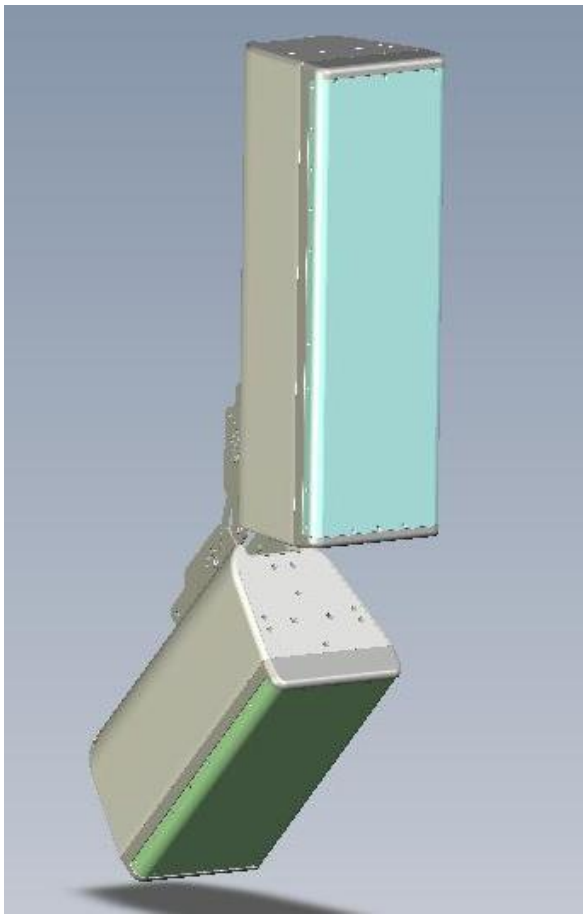

Figure 1  DF-IM down fill bracket
212IM and 112IM in long throw/short throw configuration

Figure 2 shows the DF-IM bracket assembly. This bracket assembly consists of the following parts:

2 ea. enclosure mounting brackets
1 ea. connecting bracket
1 ea. M12 hinge pin
1 ea. M12 stainless steel nylon insert flange nut
2 ea.  M10 alignment pins
2 ea. M10 stainless steel nylon insert flange nuts

8 ea. M10 x 20 stainless steel bolts
8 ea. M10 internal tooth lock washers stainless steel

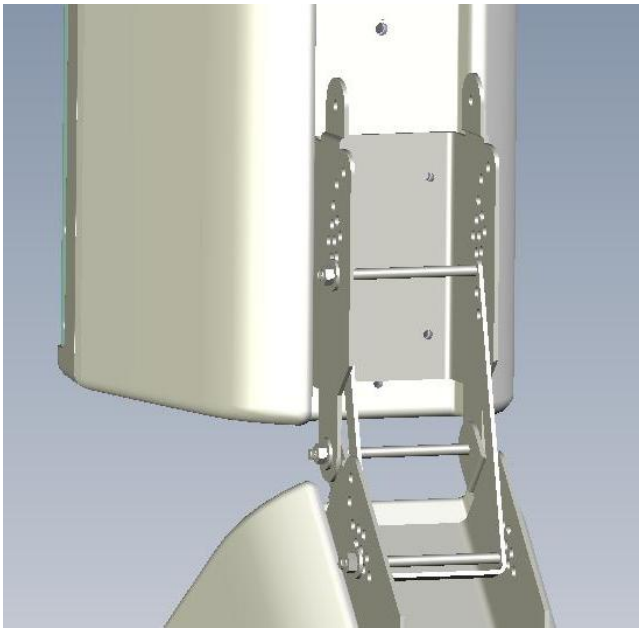

FIGURE 2

1. The two enclosure mounting brackets are identical and either may be mounted on the 212IM. The first bracket should be securely mounted to the 212IM enclosure and the internal tooth lock washers and M10 bolts should be fully tightened.
Verify that all M10 bolts are secure and tight prior to proceeding.

2.The second enclosure mounting bracket should be mounted to the 112IM enclosure, with the enclosure positioned upside down in order to allow the 112IM bracket to mate with the identical bracket on the 212IM (see Figure 3). The M10 stainless steel bolts and internal tooth lock washers should be fully tightened.

3. The 212IM should now be rigged from the top as it will be flown and raised to a height that will allow the 112IM to be positioned and the two enclosure mounting brackets to be mated together.

WARNING: The top enclosure must be suspended in accordance with all local and national codes. Insure that the top enclosure is secure and rigged properly prior to lifting off the ground. Also double check all M10 bolts on both sections of the DF-IM

The M12 hinge pin should be inserted into the appropriate mounting holes using the M12 nylon insert nut. Do not substitute any parts.
This operation should require two people to perform safely.

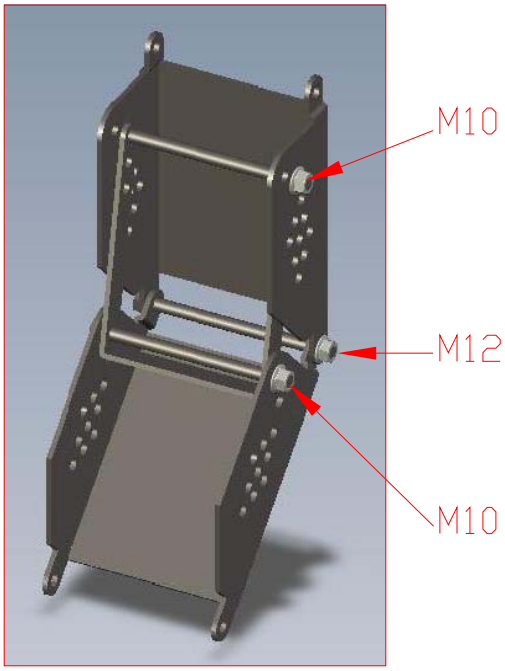


DF-IM showing bolt locations

4. One of the M10 alignment pins now be used to mount the angle bracket to the lower enclosure mounting bracket (the 112IM).
The DF-IM is capable of aiming angles between 0 degrees and 45 degrees (down tilt) in 5 degree increments. The aiming data is shown below.

| AIMING ANGLE | PIN LOCATIONS |
|---|---|
| 0 degrees | 0,3 |
| 5 degrees | 5,1 |
| 10 degrees | 10,1 |
| 15 degrees | 15,1 |
| 20 degrees | 20,2 |
| 25 degrees | 25,3 |
| 30 degrees | 30,2 |
| 35 degrees | 35,1 |
| 40 degrees | 40,1 |
| 45 degrees | 45,1 |

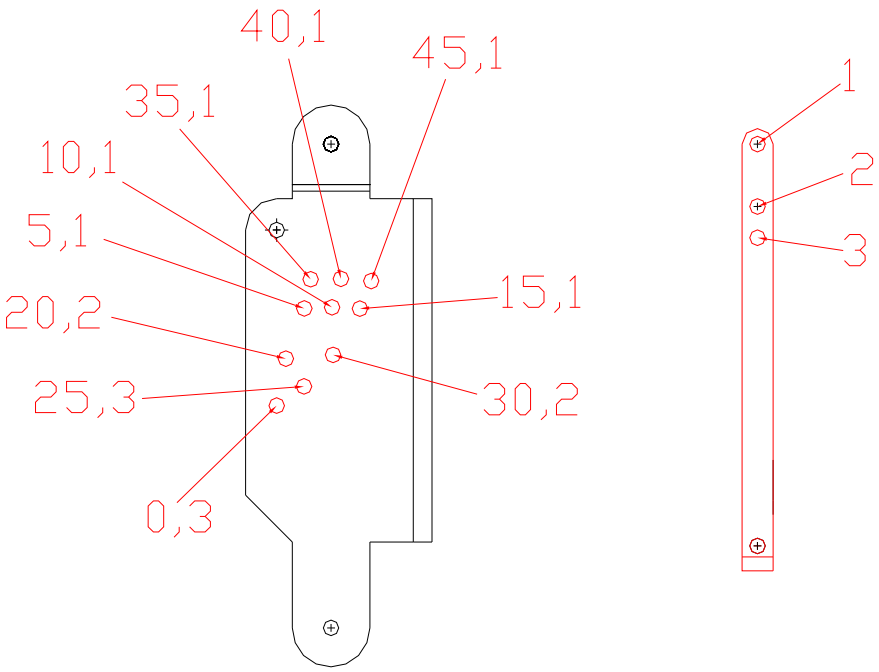


Aiming Locations for DF-IM

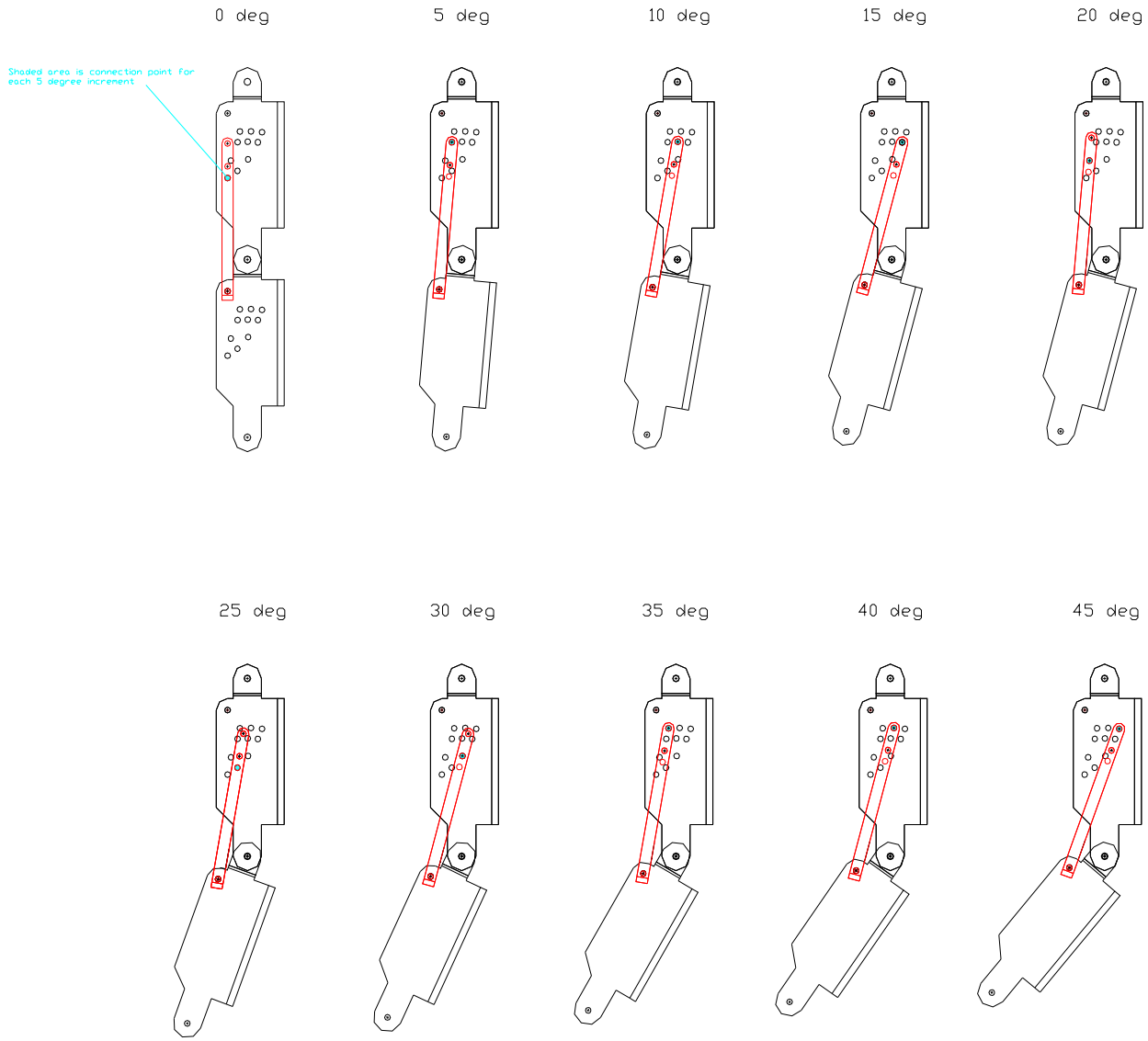


Bracket configurations for various aiming angles

5. The 112IM may now be lifted to achieve the desired down fill aiming angle. The second M10 alignment pin should now be used to set the desired mounting angle.

6. Tighten all bolts securely on both the 112IM and 212IM down fill bracket assembly. The two enclosure assembly may now be lifted to its desired height. All associated rigging the responsibility of others.

**One Systems USA, Inc.** * 6204 Gardendale Dr. * Nashville, TN 37215
**One Systems Group Co. Ltd.** * European Division * Mittelsmoorer Strasse 12 * 28879 Grassberg German
**One Systems Global Co., Ltd**. * 87/114 Modern Town 15th Floor * Sukhumvit 63, Ekkamai Soi 3, Klongtoey, Bangkok, 1010 Thailand

# FULL RANGE EQUALIZATION & FILTER RECOMMENDATIONS

(Amended April 1, 2010)

The majority of One Systems direct weather high performance loudspeaker systems are used in full range(passive) mode. In this configuration the systems can still benefit from high pass filtering (low cut) and selective parametric or 1/3 octave equalization.

The presets listed below are recommendations based on the far field frequency response data for each system. For most systems, 1/3 octave parametric filters have been recommended. This allows for comparable equalization to by applied to each system with a conventional (non-parametric) 1/3 octave equalizer. When bandwidths greater than 1/3 octave are recommended these bandwidths can be easily approximated by using multiple 1/3 octave filters with appropriate gain settings.

In all cases, high pass filters should be used to provide additional low frequency system protection, increased reliability, and additional amplifier headroom. High pass filters are highly recommended for all sound reinforcement systems. The recommended high pass filters are 4$^{th}$ order (24dB/octave) Butterworth filters but 2$^{nd}$ order (12dB/octave) may be used. In almost all cases the addition of a high pass filter with the appropriate corner frequency will produce superior system performance and reliability.

## 103IM

| | | |
|---|---|---|
| PEQ1: Frequency 4kHz | Bandwidth 0.33oct | Gain -2.dB |
| PEQ2: Frequency 2.5kHz | Bandwidth 0.33oct | Gain -2.0dB |
| Low Shelf: (12dB/oct) | Frequency 150Hz | Gain +3dB |
| HPF: Frequency 70Hz | 24dB/octave Butterworth | |

## 106IM

| | | |
|---|---|---|
| PEQ1: Frequency 800Hz | Bandwidth 0.33oct | Gain -2.0dB |
| PEQ2: Frequency 1kHz | Bandwidth 0.33oct | Gain -2.0dB |
| PEQ3: Frequency 1.25kHz | Bandwidth 0.33oct | Gain -2.0db |
| Low Shelf: (12dB/oct) | Frequency 125Hz | Gain +3dB |
| HPF: Frequency 70Hz | 24dB/octave Butterworth | |

*- continues on page 2 -*

## 108IM (105x60)

| | | | |
|---|---|---|---|
| PEQ1: | Frequency 1250Hz, | Bandwidth 0.33 oct, | Gain -2.5dB |
| PEQ2: | Frequency 100Hz, | Bandwidth 0.50 oct, | Gain +2.0dB |
| HPF: | Frequency 65Hz, | 24dB/octave, Butterworth | |

## 108IM (60x40)

| | | | |
|---|---|---|---|
| PEQ1: | Frequency 1.6kHz, | Bandwidth 0.33 oct, | Gain -2.0dB |
| PEQ2: | Frequency 100Hz, | Bandwidth 0.50 oct, | Gain +2.0dB |
| HPF: | Frequency 65Hz, | 24dB/octave, Butterworth | |

## 208CIM

| | | | |
|---|---|---|---|
| PEQ1: | Frequency 100Hz, | Bandwidth 0.50 oct, | Gain +2.5dB |
| HPF: | Frequency 65Hz, | 24dB/octave, Butterworth | |

## 112IM (60x40)

| | | | |
|---|---|---|---|
| PEQ1: | Frequency 1000Hz, | Bandwidth 0.50 oct, | Gain -2dB |
| PEQ2: | Frequency 65Hz, | Bandwidth 0.33 oct, | Gain +3dB |
| HPF: | Frequency 50Hz, | 24dB/octave, Butterworth | |

## 112IM (105x60)

| | | | |
|---|---|---|---|
| PEQ1: | Frequency 1000Hz, | Bandwidth 0.40 oct, | Gain -2dB |
| PEQ2: | Frequency 65Hz, | Bandwidth 0.33 oct, | Gain +3dB |
| HPF: | Frequency 50Hz, | 24dB/octave, Butterworth | |

## 115TW (105x60)

| | | | |
|---|---|---|---|
| PEQ1: | Frequency 1250Hz, | Bandwidth 0.33 oct, | Gain -2.5dB |
| PEQ2: | Frequency 55Hz, | Bandwidth 0.33 oct, | Gain +3.0dB |
| PEQ3: | Frequency 2.5kHz, | Bandwidth 0.33 oct, | Gain -2.0dB |
| HPF: | Frequency 40Hz, | 24dB/octave, Butterworth | |

## 115RW (105x60)

| | | | |
|---|---|---|---|
| PEQ1: | Frequency 1250Hz, | Bandwidth 0.33 oct, | Gain -2.5dB |
| PEQ2: | Frequency 55Hz, | Bandwidth 0.33 oct, | Gain +2.0dB |
| PEQ3: | Frequency 2.5kHz, | Bandwidth 0.33 oct, | Gain -2.0dB |
| HPF: | Frequency 40Hz, | 24dB/octave, Butterworth | |

## 115TW (60x40)

| | | | |
|---|---|---|---|
| PEQ1: | Frequency 1250Hz, | Bandwidth 0.33 oct, | Gain -2.5dB |
| PEQ2: | Frequency 55Hz, | Bandwidth 0.33 oct, | Gain +3.0dB |
| PEQ3: | Frequency 2.5kHz, | Bandwidth 0.33 oct, | Gain -2.0dB |
| HPF: | Frequency 40Hz, | 24dB/octave, Butterworth | |

## 115RW (60x40)

| | | | |
|---|---|---|---|
| PEQ1: | Frequency 600Hz, | Bandwidth 0.50 oct, | Gain -2.0dB |
| PEQ2: | Frequency 55Hz, | Bandwidth 0.33 oct, | Gain +2.0dB |
| PEQ3: | Frequency 2.5kHz, | Bandwidth 0.33 oct, | Gain -2.5dB |
| HPF: | Frequency 40Hz, | 24dB/octave, Butterworth | |

## 115UM

| | | | |
|---|---|---|---|
| PEQ1: | Frequency 2.5kHz, | Bandwidth 0.33 oct, | Gain -2.5dB |
| HPF: | Frequency 60Hz, | 24dB/octave, Butterworth | |

## 112UM

| | | | |
|---|---|---|---|
| PEQ1: | Frequency 2.5kHz, | Bandwidth 0.33 oct, | Gain -2.5dB |
| HPF: | Frequency 65Hz, | 24dB/octave, Butterworth | |

## 212CIM

| | | | |
|---|---|---|---|
| PEQ1: | Frequency 1000Hz, | Bandwidth 0.33 oct, | Gain -2.5dB |
| PEQ2: | Frequency 70Hz, | Bandwidth 0.33 oct, | Gain +2.0dB |
| PEQ3: | Frequency 3.0kHz, | Bandwidth 0.33 oct, | Gain -2.5dB |
| HPF: | Frequency 55Hz, | 24dB/octave, Butterworth | |

## 212IM

| | | | |
|---|---|---|---|
| PEQ1: | Frequency 900Hz, | Bandwidth 0.33 oct, | Gain -2.5dB |
| HPF: | Frequency 50Hz, | 24dB/octave, Butterworth | |

## 215RW

| | | | |
|---|---|---|---|
| PEQ1: | Frequency 1250Hz, | Bandwidth 0.33 oct, | Gain -2.5dB |
| PEQ2: | Frequency 50Hz, | Bandwidth 0.33 oct, | Gain +3.0dB |
| PEQ3: | Frequency 2.5kHz, | Bandwidth 0.33 oct, | Gain -2.0dB |
| HPF: | Frequency 40Hz, | 24dB/octave, Butterworth | |

## 312CIM

| | | | |
|---|---|---|---|
| PEQ1: | Frequency 3.0k Hz, | Bandwidth 0.33 oct, | Gain -2.5dB |
| PEQ2: | Frequency 60Hz, | Bandwidth 0.33 oct, | Gain +2.0dB |
| PEQ3: | Frequency 11.5kHz, | Bandwidth 0.33 oct, | Gain -3.0dB |
| HPF: | Frequency 50Hz, | 24dB/octave, Butterworth | |

## Cross Field Array (CFA)

| | | | |
|---|---|---|---|
| PEQ1: | Frequency 800Hz, | Bandwidth 0.50 oct, | Gain +2.0dB |
| PEQ2: | Frequency 125Hz, | Bandwidth 1.0 oct, | Gain +2.0dB |
| PEQ3: | Frequency 4.0kHz, | Bandwidth 0.33 oct, | Gain -2.0dB |
| HPF: | Frequency 70Hz, | 24dB/octave, Butterworth | |

## 118Sub-W

| | | | |
|---|---|---|---|
| PEQ1: | Frequency 40Hz, | Bandwidth 0.50 oct, | Gain +3.5dB |
| HPF: | Frequency 35Hz, | 24dB/octave, Butterworth | |
| LPF: | Frequency 80Hz, | 24dB/octave, Linkwitz-Riley | |
| Gain: | Set to match high frequency enclosure and acoustic requirements | | |

## 218Sub-W

| | | | |
|---|---|---|---|
| PEQ1: | Frequency 40Hz, | Bandwidth 0.50 oct, | Gain +3.5dB |
| HPF: | Frequency 35Hz, | 24dB/octave, Butterworth | |
| LPF: | Frequency 80Hz, | 24dB/octave, Linkwitz-Riley | |
| Gain: | Set to match high frequency enclosure and acoustic requirements | | |

## 212Sub-W

| | | | |
|---|---|---|---|
| PEQ1: | Frequency 50Hz, | Bandwidth 0.50 oct, | Gain +3.5dB |
| HPF: | Frequency 45Hz, | 24dB/octave, Butterworth | |
| LPF: | Frequency 80Hz, | 24dB/octave, Linkwitz-Riley | |
| Gain: | Set to match high frequency enclosure and acoustic requirements | | |

## 112IM-Sub

| | | | |
|---|---|---|---|
| PEQ1: | Frequency 65Hz, | Bandwidth 0.50 oct, | Gain +3.5dB |
| HPF: | Frequency 45Hz, | 24dB/octave, Butterworth | |
| LPF: | Frequency 80Hz to 120Hz, 24dB/octave, Linkwitz-Riley | | |
| Gain: | Set to match high frequency enclosure and acoustic requirements | | |
| | Set HPF on associated mid/high enclosure to match LPF frequency of 112IM-Sub | | |

# EQUIVALENT THROAT TECHNOLOGY

Modern audio frequency reproduction systems use transducers to convert electrical energy to acoustical energy. Systems used for the reinforcement of speech and music are referred to as Sound Reinforcement Systems. These systems are used to reinforce the program material (voice, music or other material) by providing an increase in signal level, or gain, in order to generate sufficient sound pressure levels in large spaces.

Sound reinforcement systems often use devices known as compression drivers and horns to reinforce the program material. The compression driver is a simple acoustic transducer that uses a small and light weight diaphragm to convert the electrical signals to acoustic signals. The small diaphragm will exhibit fewer resonant modes than a large diaphragm and the lower mass associated with a small diaphragm can produce a higher conversion efficiency.
The small diaphragm, however, has a lower radiation impedance than a larger diaphragm so a horn is coupled to the “exit” of the compression driver. The horn acts to “transform” the low radiation impedance of the driver to a higher radiation impedance associated with the mouth of the horn. The small entrance of the horn is mated to the small diameter acoustic exit of the compression driver. The acoustic impedance associated with this small area is then transformed to a higher acoustic impedance associated with the larger opening of the horn, referred to as the horn mouth. The rate at which the cross sectional area of the horn changes between the small opening, or throat, and the large opening, or mouth is referred to as the flare rate.

In addition to acting like an acoustic transformer, the horn also acts to direct the radiated energy in a specific location. The walls of the horn act to guide the radiated wave fronts. In this way the total radiated acoustic power from the driver is concentrated into a portion of space smaller than the space had the horn not been mounted to the driver. The acoustic density, or energy per unit area, is increased and, as a result, the sound pressure level in an area is higher than it would be if the horn were not coupled to the driver for long wavelength conditions (i.e. when the radiated wavelength is long relative to the horn it is referred to as a “long wavelength”) . It is a common practice for horns to exhibit circular, elliptical, square,or rectangular radiation patterns.

This horn/driver system has a bandwidth ,or operating range. The low frequency response of the horn/driver system is limited by the length and mouth area of the horn. When the radiated wavelengths become large compared to the length and mouth circumference the horn is no longer able to radiate any appreciable acoustic power and the overall horn/driver efficiency is substantially reduced. For the mouth of the horn to have relatively high acoustic impedance, the following relationship must be maintained: ka greater than 1, where k= (2*pi)/wavelength and a=mouth radius. This equation basically requires that mouth circumference (i.e., 2*pi*a) be greater then the wavelength of the lowest frequency to be effectively radiated. This frequency, where the wavelengths become long relative to the mouth circumference, is referred to as the cutoff frequency.

There are many parameters that affect the high frequency response of the compression driver and horn combination. A specific area of interest is the high frequency limit related to the systems ability to maintain the desired directional pattern. A desirable property of a horn is its ability to maintain a specific directional pattern independent of frequency. These horns, are often referred to as “constant directivity” horns (see “What’s SO Sacred About Exponential Horns”, Keele, D.B. Audio Engineering Society 51st Convention, May 13-16, 1975). Many sound reinforcement applications require this property for accurate coverage of a specific area.

The ability of a horn to maintain constant directivity is related to the radius of the compression driver exit. As the wavelengths become short compared to the exit radius the directivity of the wave front emerging from the driver exit is reduced,becoming more narrow. The directivity pattern of the radiated waveform is also referred to as the beamwidth. The beamwidth is rated at an angular distance from the axial response of the horn. The specific angle is determined by finding the points on either side of the horn major axis where the sound pressure level has decreased 6dB from the pressure on axis. (This assumes that the acoustic pressure is a maximum on the horn axis). The included angle between the -6dB points is referred to as the beamwidth. If the radiated directivity, or beamwidth, becomes less than the included angles of the horn then the radiation pattern in no longer constant and the wave front radiated by the driver is no longer controlled by the included angles of the horn. (Reference “On the Radiation of Sound from an Unflanged Circular Pipe”, Levine and Schwinger Physical Review, Vol 73 Number 4, 1948), ( “Acoustics”, Beranek, Chapter 4 Radiation on Sound, McGraw-Hill 1954).

Figure 1 is a cross sectional view of a typical compression driver. A diaphragm mounted to a flexible membrane has an annular coil attached. The annular coil, or voice coil, is suspended in the magnetic gap and the diaphragm is spaced over the phase plug. Acoustic radiation from the diaphragm is transmitted thru the openings in the phasing plug. The phase plug openings may be radially oriented, circumferentially oriented, or a series of simple holes. The summation of the cross sectional areas associated with the phase plug openings forms the acoustic loading of the diaphragm. This phase plug cross sectional area can be made equal to the diaphragm area but is usually substantially lower. The change in cross sectional area between the diaphragm and the phase plug openings is the

source of the loading. The volume of air between the diaphragm and the phase plug is compressed due to this reduction in area. The radiation impedance is increased by the square of the ratio of the diaphragm area and the phase plug initial area.

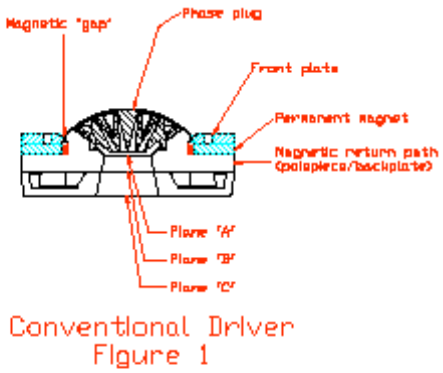


FIGURE 1

The individual channels of the phase plug add to an overall area, still smaller than that of the diaphragm area, at the plane defined in figure 1 as “plane “A””. Typical compression driver design then includes some linear distance proceeding toward the outlet, or throat of the driver, that expands the cross sectional area in some fashion. This section may be the length defined by the thickness of the magnetic return path backplate. This length is shown in figure 1 as the distance between plane “A” and plane “B”. In other common designs an adaptor plate is added to the rear of the magnetic return backplate and is the thickness defined by the distance between plane “B” and plane “C”. The area at plane “B” or plane “C” is always larger than the area of plane “A” in order to not introduce acoustic reflections associated with a reduction in area.

As a consequence of moving farther away from plane “A”, and the necessary increases in cross sectional area, the associated radius at any plane away from the summation point of the phase plug (plane “A”) is increased. This increase in the radius then limits the ability of the driver to produce a wide dispersion and broad radiation pattern as frequency is increased.

Inspection of figure 1 indicates that the most ideal location for a throat with a minimized radius is at the location shown in the drawing as “plane”A”’. This is the point where the cross sectional area is the smallest and, as a result, the radius is minimal for any given design.

There is no specific radius or associated area the will best optimize the performance. The optimal area will be a function of the plane immediately at the summation point of the phase plug. The area at the summation point of the phase plug will be related to design features such as compression ratio and driver diaphragm area. What is important in order to maximize the high frequency radiation pattern bandwidth is that, for any given summation plane area, the “driver throat” begin at this plane.

Figure 2a illustrates a conventional compression driver with a radius of 0.4375 inches 0.875” diameter) at the summation plane of the phase plug. This figure shows a length that connects this summation plane to the “nominal” exit of the driver. This 1 inch radius (2” diameter) is a very common exit dimension for professional compression drivers. This 1 inch radius produces a high frequency limit of 5400Hz for a 100 degree radiation pattern. The configuration represented in figure 2b has the same phase plug summation plane radius but in figure 3 this is also the effective throat of the driver. At this plane the elements of the horn that provide directional information to the wave front are implemented. This is as opposed to the situation in figure 2a where the conventional horn would be coupled to the driver at the 1 inch radius, rather than the 0.4375 radius.

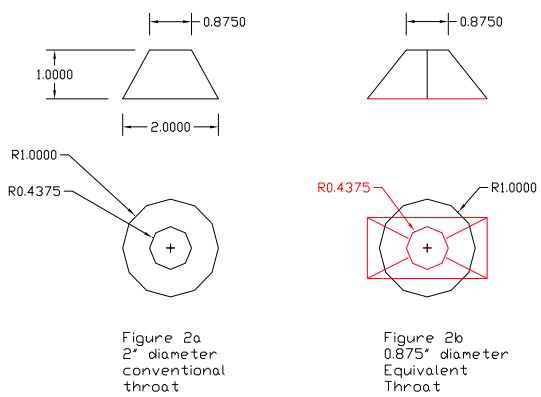


FIGURE 2a and 2b

Coupling the required radiation geometry to the driver (i.e. the horn) at the phase plug summation plane results in a high frequency limit of 13,500Hz. From this example, it can be seen that there is substantial advantage in have a horn that imparts directional information to the wave fronts coupled to a driver using the smallest possible radius.

This is accomplished by altering the geometry of the magnetic return circuit back plate. The portion of the back plate that is coincident with plane “A” (figure 1) has an opening that is made equal to the radius of the circle defined by the phase plug summation plane.

The geometry of the plate then immediately begins to form the desired horizontal and vertical (or radial in the case of a circular or elliptical radiation pattern). As an example, the horizontal included angle beginning at the phase plug summation plane could be 100 degrees and the vertical could also be 100 degrees, or any other included angle that would be less than the limit imposed by the phase plug summation plane radius. (A typical practice would be to have a 100 degree horizontal pattern and a 60 degree to 40 degree included angle in the vertical plane).

As a reference, data taken from the text “Acoustics” by Beranek can be configured as shown below:

TABLE 1

| Ka | Included angle directional response (-6dB) |
|---|---|
| 0.5 | Nearly Omni directional |
| 1.0 | Nearly Omni directional (but reducing included angle) |
| 1.5 | Approximately 150 degrees |
| 2.0 | Approximately 120 degrees |
| 2.5 | Approximately 100 degrees |
| 3.0 | Approximately 75 degrees |
| 3.8 | Approximately 65 degrees |

Where k=(2*pi)/wavelength and a= exit radius

To continue the example, if an included angle of 100 degrees is required the data above suggests that the value of ka should be approximately 2.5. This value can be substituted into the equation ka=2.5, which becomes (2*pi*a)/wavelength.
After rearranging to solve for the wavelength, the expression becomes:

Wavelength=(2*pi*a)/2.5

This expression can then be solved for various values of the exit radius. Once the exit radius is established the associated wavelength is calculated and the corresponding high frequency dispersion,or radiation angle limit (for sound in air) can then be determined. This is the frequency where the radiation dispersion angle becomes less then the included angle of the horn walls and the horn is unable to provide directional control of the waveform.

TABLE 2

| a (inches) | wavelength (approx.) | corresponding frequency (approx.) |
|---|---|---|
| 0.4” | 1.0” | 13,500Hz |
| 0.5” | 1.25” | 10,800Hz |
| 0.55” | 1.38” | 9820Hz |
| 0.6” | 1.51” | 9000Hz |
| 0.7” | 1.76” | 7715Hz |
| 0.75” | 1.88” | 7200Hz |
| 1.0” | 2.51” | 5400Hz |

It can be seen from the above data that as the throat radius, “a”, is reduced, the high frequency limit is increased implying that the horn/driver combination is capable of directional control at higher frequencies. This data describes the directional behavior of an unflanged tube. When an acoustic “flange” is added the directional behavior will be altered. This change in the radiation pattern is shown in “Acoustics” by Beranek, Figure 4.20. The dispersion in actually increased (the beamwidth increases) between ka=1.5 and ka=4. The data shown compares a piston in an infinite plane baffle, a piston at the end of a long tube (the data from tables 2 and 3) and a piston in free space (no baffle). The addition of a horn to the exit of a driver will alter the directional response and, for certain values of ka will increase the dispersion angle, or beamwidth. The horn will alter the dispersion characteristics much like the addition of a baffle in figure 4.20 of Bernaek. This effect is shown in the actual measured data.

Prior art designs have resolved this inherent inability of a driver/horn combination to control dispersion at frequencies above the point where the exit radius became larger than the radiated wavelengths by utilizing a diffraction slot. This diffraction slot is placed at some distance beyond the plane referred to as plane “B” or plane “C”.
Diffraction is an effect the produces spreading of a wave form when that wave form encounters a gap, or slit. The smaller the slit relative to the wavelength, the wider the resultant spreading of the waveform relative to its original. This spreading will increase the dispersion pattern, or beamwidth of the radiated wave. Diffraction slots are an effective way to broaden a wavefront that has become narrow due to the exit radius of the driver being large relative to the radiated wavelengths.

The use of diffraction slots can present two basic problems. The first problem is that diffraction slots represent a change in cross sectional area. This area change, or discontinuity, will produce a reflected wave in the horn. The reflected wave produces both time domain distortion as well as a change in the amplitude versus frequency response of the horn/driver system.

The second difficulty with diffraction slots, if they are located between the driver exit and the horn mouth, is that they can introduce path length differences associated with the physical geometry required to transition from the driver exit geometry to the narrow slot required to produce the necessary diffraction to achieve a requires dispersion, or beamwidth. These path length differences can result in uneven acoustical summing of the waveforms due to the phase differences associated with the different path lengths.

It should be noted that when a horn is designed to produce a specific radiation, or dispersion pattern discontinuities are typical. The designers goal is to minimize the number and of magnitude of those discontinuities.

A more detailed view of a typical implementation of an Equivalent Throat driver can be seen in figure 3 and figure 4. In both of these figures plane “D” is the same as plane “A” in figure 1. In this implementation, both drivers have identical phase plug summation plane radii. The conventional driver, shown in figure 1 has an exit radius that is larger than the phase plug summation radius. The Equivalent Throat drive (figures 3 and 4) has an exit radius that is identical to and coincident with the phase plug summation plane. Based on the data in Tables 1 and 2, a smaller exit radius will produce a wider dispersion pattern (and larger included angle and larger beamwidth).

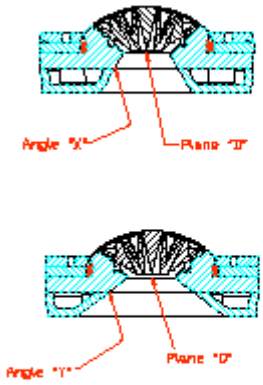


Equivalent Throat Driver
Figures 3 and 4

It can be seen in Figure 3 that angle “x” begins at plane “D”. Because this angles begins at plane “D” the driver/horn combination provided directional control to the wavefront at the optimal point, where the radius is smallest and the high frequency limit bandwidth is greatest. Figure 4 is the same driver but shows angle “y” beginning at plane “D”. It is typical for a horn with a rectangular radiation pattern (i.e. 90 degrees horizontal by 40

degrees vertical, 120 degrees horizontal by 60 degrees vertical, 60 degrees horizontal by 40 degrees vertical, or any of a set of possibilities of horizontal by vertical rectangular geometries) to have two different angles beginning at plane “D”. It is also possible to have identical angles if the desired radiation pattern is square or a single angle if the desired pattern is oval in nature. (i.e. circular or elliptical or any other “round” geometry).

Figure 5 is a photograph of a prototype Equivalent Throat (ET) driver. The rectangular black line is the perimeter of the equivalent throat (this line was added for clarity. The photograph did not clearly show the perimeter of the equivalent throat section). As can be seen in figure 5, this prototype was designed to develop a rectangular radiation pattern. The silver colored geometry is the section of the magnetic return path steel back plate that is shaped to form a portion of the actual throat geometry. The equivalent throat design uses the entire thickness of the magnetic return path steel back plate to form the initial portion of the desired horizontal and vertical (for a rectangular implementation) radiation pattern of the driver/horn combination. The white portion of the photograph is an adaptor plate but is not necessary for proper operation of the equivalent throat design. The salient feature of the design is that the desired radiation geometry begin at the phase plug summation plane where the exit radius can be made a minimum for any given driver design. This requires that the thickness of the back plate, from plane “A” in figure 1 have the shape required to form the desired radiation geometry of the wavefront. This differs from a conventional design in that the conventional design has an exit radius on plane “B” of figure one. The conventional design exit radius is displaced from the phase plug summation plane by the thickness of the magnetic return path steel back plate. The conventional design exit radius is larger than the radius at the phase plug summation plane. (The conventional design could if fact be an unintentional subset of the equivalent throat design if the included angle between the phase plug summation radius and the larger exit radius were the desired included acoustic radiation angle for a horn of circular cross section.)

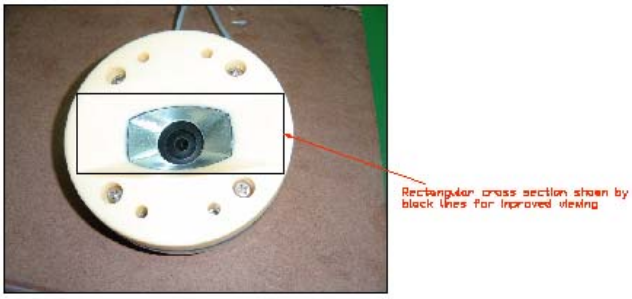


FIGURE 5

Figure 6 is a photograph of an equivalent throat driver with a matching equivalent throat horn. An equivalent throat horn differs from a conventional horn in that the entrance geometry of the horn must match the exit geometry of the driver or be adapted to the radius of the phase plug summation plane. In the example shown in figure 6, the horn's widest included (in the case of a rectangular pattern implementation) matches that of the widest angle that the radius associated with the phase plug summation plane.

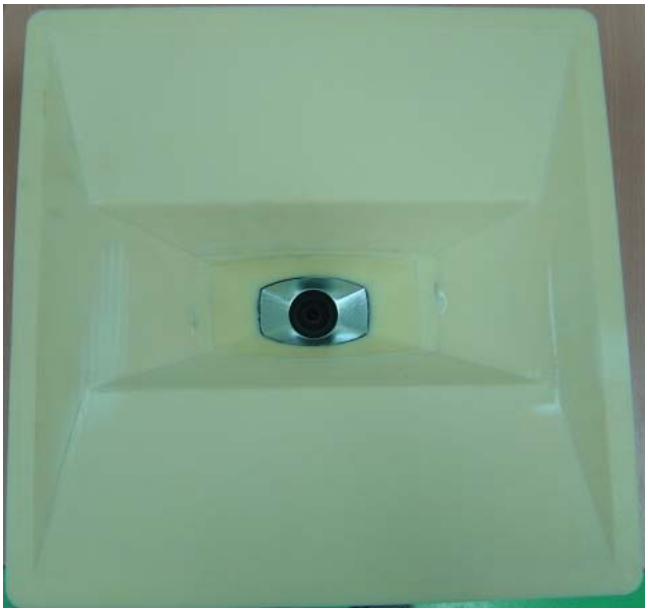

FIGURE 6

Figure 7 is a photograph of the entrance side of the horn and illustrates the geometrical match with the exit geometry of the driver.

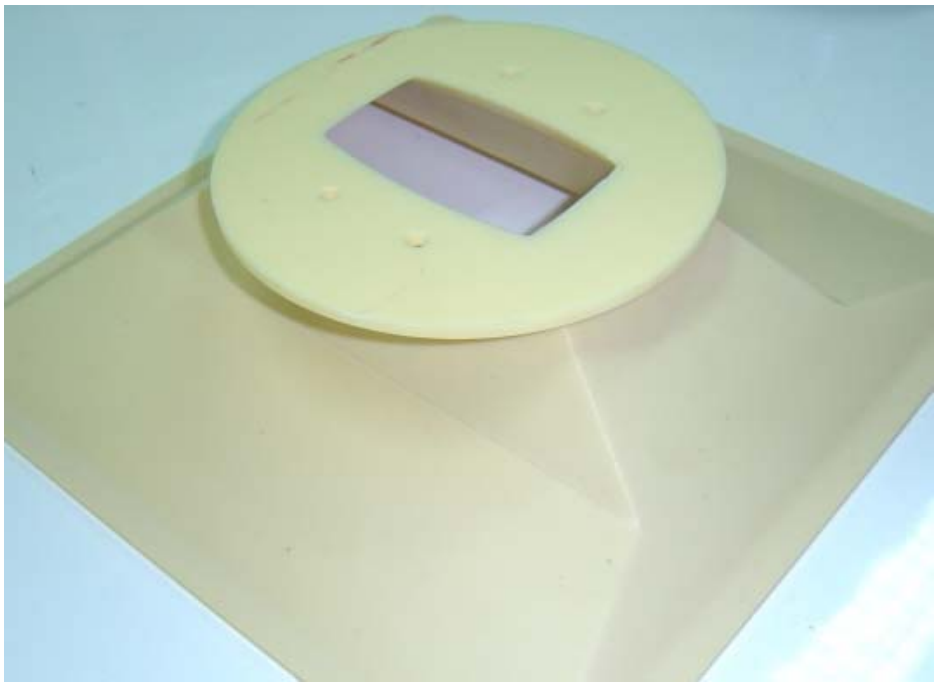

Figure 7

Other horn geometries, all with a rated beamwidth less than that supported by the phase plug summation plane radius may certainly be used with an equivalent throat driver. Figure 8 is the rear view of a prototype horn with a rated -6dB beamwidth of approximately 70 degrees in the horizontal plane and 40 degrees in the vertical plane. The unique geometry on the entrance side of the horn matches the exit geometry of the equivalent throat driver. The radius of the horn entrance matches the radius of the driver phase plug summation plane radius. The internal portion of the horn shown in figure 8 then becomes the required geometry to produce the desired acoustic dispersion. As is the case with all equivalent throat horns, the geometry of the horn in figure 8 begins the desired included angle at the plane of the horn entrance, which is coincident with the plane labeled “A” in figure 1.

FIGURE 8

Acoustical measurements of the horn driver combination indicate good agreement with theory. The radius of the phase plug summation plane for the equivalent throat driver is 0.55 inches. The radius at the exit of the conventional driver is 0.675 inches. The predicted difference in the high frequency dispersion limit is 1757Hz. The measured difference is approximately 1800Hz. This represents excellent agreement. The absolute magnitude of the included angle (-6dB points) and associated frequency, however, is different. The -6dB included angles for a radius of 0.55 inches (the equivalent throat horn/driver combination) is approximately 9820Hz. The measured included angle is approximately 11,400Hz. (The conventional horn/driver, with an exit radius of 0.675 inches produces a measured included angle of approximately 9600Hz). In both cases, the difference between the data calculated in tables 1 and 2 and the measured results are thought to be associated with acoustic end correction and boundary conditions. The data shown in tables 1 and 2 ("Acoustics"' Beranek) was performed on unflanged pipes. The addition of the horn to the system will alter the acoustic conditions and modify the data shown in tables 1 and 2. The dispersion pattern is wider, and is in good agreement with the changes seen in Beranek's figure 4.20 between ka=1.5 and ka=4. The important result is that the difference between the equivalent throat driver and horn and the conventional driver and horn is very close to the theoretical prediction.

In as much as the acoustic loads and boundary conditions presented by the two horns are similar it is expected that the delta between the two systems should be maintained.

Figure 9 represents the amplitude versus frequency response of the equivalent throat driver shown in figure 5 and the horn shown in figure 6. The top curve is the response of the horn and driver on the major acoustic axis of the horn. The lower curve is the amplitude versus frequency response 50 degrees off the horizontal axis. (The horn shown in figure 6 has a nominal horizontal included angle of 120 degrees and a vertical included angle of 60 degrees). This initial prototype was designed with a horizontal included angle greater than what the phase plug summation plane radius would support, per tables 1 and 2. The data presented in this figure clearly indicates a separation of greater than 6dB above 10 kHz.

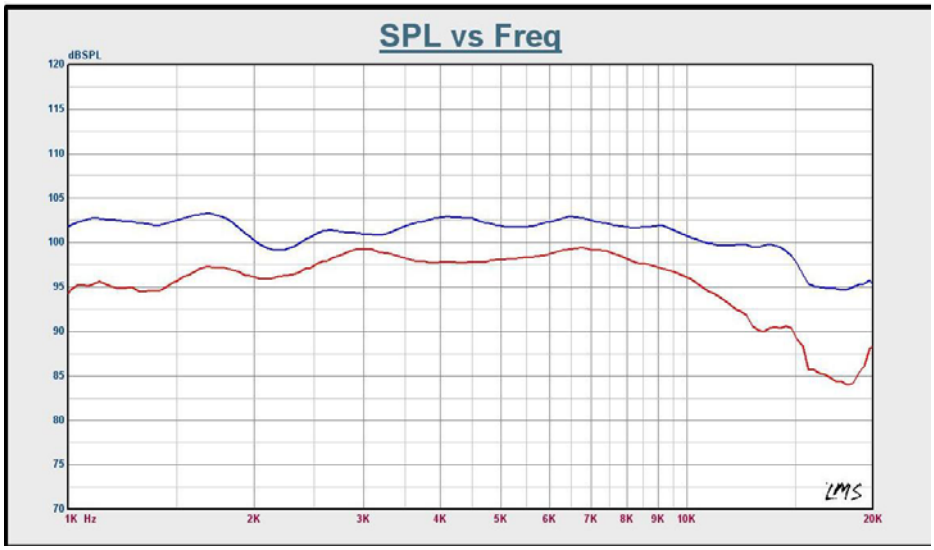


FIGURE 9

Figure 10 represents the on axis and off axis response of a conventional (i.e. non Equivalent Throat) driver and horn combination. It is clearly evident that the delta between the on axis response and off axis response begins to increase above 8kHz. Table 3 is a list of selected data points for both the equivalent throat driver/horn combination and a conventional driver and horn. This table lists the on/off axis delta for each drive and horn combination

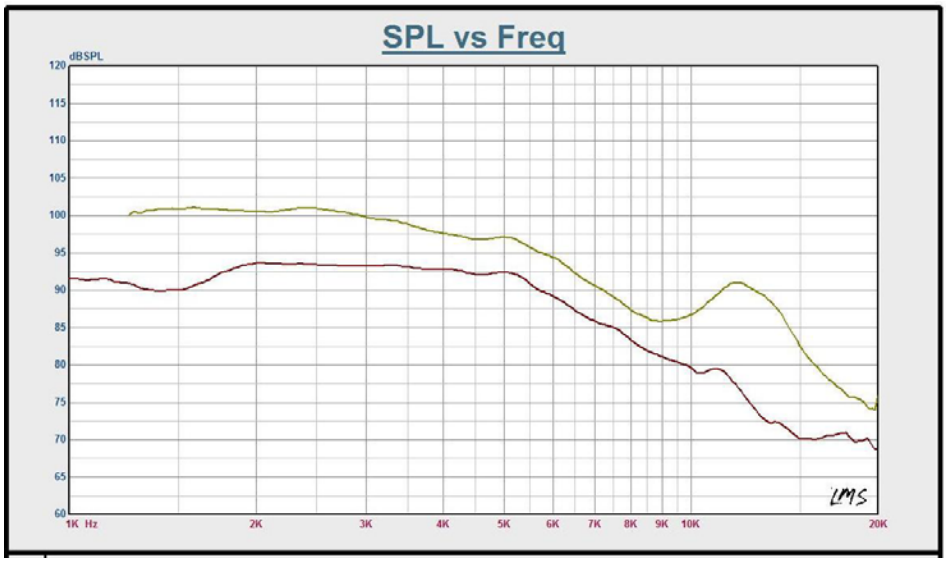


FIGURE 10

TABLE 3

| Frequency (Hz) | Equivalent Throat Delta | Conventional Delta |
|---|---|---|
| 9.6kHz | 4.7dB | 6.0dB |
| 9.9kHz | 4.7dB | 6.8dB |
| 10.5kHz | 5.0dB | 9.1dB |
| 11.0kHz | 5.5dB | 10.1dB |
| 11.5kHz | 6.1dB | 12.0dB |
| 12.0kHz | 7.2dB | 14.5dB |

As shown in table 3, the equivalent throat driver/horn combination maintains a smaller delta between the on axis response and the off axis response, indicating the ability to maintain a wider frequency response at a higher frequency.
It should also be stated that the –6dB included angle for the equivalent throat driver/horn combination is 100 degrees and occurs at 11.5kHz. The conventional driver/horn combination -6dB included angle is 90 degrees and occurs at 9.6kHz.

Analysis of the second prototype equivalent throat horn (rear side shown in figure 8) demonstrates the ability of the overall design concept to a variety of directional

characteristics. As noted, the equivalent throat driver must incorporate the widest included angle to achieve the necessary dispersion. Additional horn geometries may then be designed with narrower dispersion angles. The response shown in figure 11 is that of the 70 degree horizontal by 40 degree vertical. Figure 11 demonstrates that additional, but narrower dispersion pattern horns, will function in a traditional manner as long as the horn entrance radius matches the phase plug summation plane radius on the equivalent throat driver.

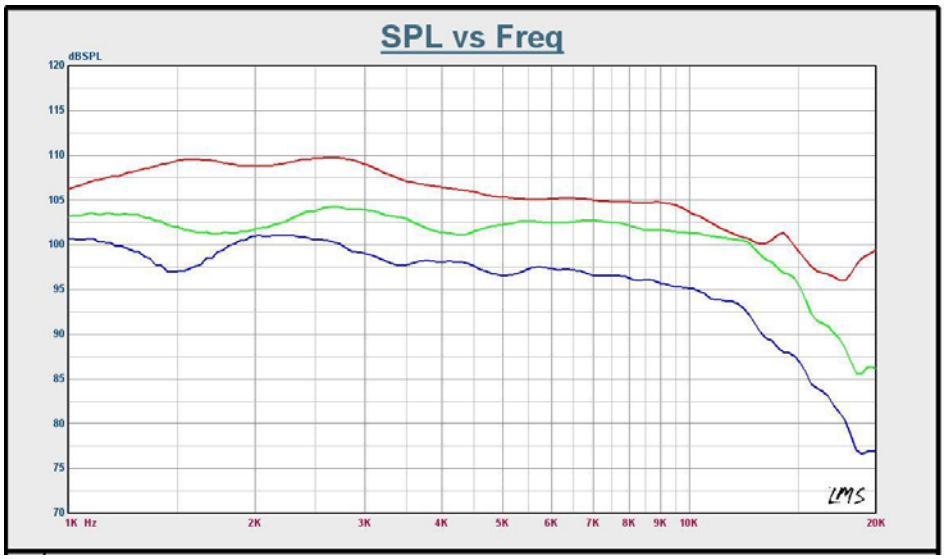


FIGURE 11

Conventional art compression drivers have an exit radius that is larger than the phase plug summation radius and is separated some distance from the plane where the phase plug summation radius is located. Because the exit radius on conventional art devices is larger than the summation plane radius the high frequency dispersion performance of the driver is limited by the exit radius.

Equivalent throat driver/horn combinations utilize the compression driver summation plane radius as the exit throat. By utilizing the summation plane radius the high frequency dispersion limit is increased.

Equivalent throat driver/horn designs utilize the compression driver magnetic return back plate to provide an included angle (or combination of angles) to provide directional information to the emerging wavefront.

The widest dispersion horn has a rear geometry that matches the exit geometry of the equivalent throat driver. Other horns may easily be used with the equivalent throat driver providing the horn has its widest dispersion, or beamwidth , that is equal to or less than the included angle, or angles, on the equivalent throat driver.

The novel and unique aspect of the Equivalent Throat system is that the driver is capable of producing wider dispersion and beamwidth than a conventional driver because the exit radius is coincident with the phase plug summation plane. As has been shown, a smaller radius exit will produce a wider dispersion.

The Equivalent Throat system is also capable of generating dispersions, or beamwidths, narrower than the included angle of the Equivalent Throat driver when other Equivalent Throat horns, of reduced dispersion angle are coupled to the driver. These reduced dispersion (higher Q) horns are coupled to the exit geometry of the Equivalent Throat driver by having an “inverse” geometry that will mate with the Equivalent Throat driver and allow the entrance radius of the horn to mate with the phase plug summation plane radius.

ONE SYSTEMS®

**One Systems USA, Inc.** * 6204 Gardendale Dr. * Nashville, TN 37215
**One Systems Group Co. Ltd.** * European Division * Mittelsmoorer Strasse 12 * 28879 Grassberg German
**One Systems Global Co., Ltd**. * 87/114 Modern Town 15th Floor * Sukhumvit 63, Ekkamai Soi 3, Klongtoey, Bangkok, 1010 Thailand

# ONE SYSTEMS
# HARSH WEATHER KIT

All One Systems™ loudspeaker systems are designed for use in permanently installed direct weather applications. The IM Series enclosures are ideally suited for extreme environments. The use of high weather-ability injection molded resin enclosures, stainless steel three layer grill assemblies and stainless steel internal rigging components insures high reliability and long service life in direct weather outdoor environments.

One Systems recognizes that marine environments present particular challenges due to high concentrations of air borne corrosive salt. Although grades of stainless steel have existed for years that are very tolerant of these high salt exposure conditions, certain internal loudspeaker components, particularly the soft steel components associated with the low frequency and high frequency transducer magnetic structures, are susceptible to corrosive activity, regardless of the associated protective coating technology.

Almost all professional audio transducer systems are designed as “vented” enclosures. Vented enclosure designs offer lower distortion in the last octave of rated operation and additional low frequency output, hence their widespread use in professional applications. The vented enclosure design, unfortunately, offers an ideal path for high salt content air into the enclosure. This path allows the soft steel of the transducer magnetic circuits to be compromised.

In addition to the enclosure vents allowing an air path into the enclosure, the One Systems ET-60x40 high frequency horns also allow an air path into the enclosure through the two side wall holes in the horn. These holes act as an “acoustic short circuit” for the acoustic resonance found in all medium to high Q horns. This acoustic resonance acts to alter the time domain performance of the system. However, like the vents for low frequency tuning, these holes must be closed for applications where high salt content is found in the atmosphere. (A parametric filter in the 400Hz to 600Hz range can mitigate this time domain effect once the horn wall holes are closed)

One Systems offers a Harsh Weather Kit designed to allow our loudspeaker systems to be used in environments that present air-borne corrosive salt elements. These kits are available for One Systems IM series enclosures only! The following kits are available for selected One Systems enclosures:

| | |
|---|---|
| HWK-1 | 112IM and 212IM |
| HWK-2 | 212CIM |
| HWK-3 | 108IM |
| HWK-4 | 208CIM |

The kits contain the necessary vent plugs (and high frequency horns, where applicable) to convert the loudspeaker systems into “closed” box designs.

If the 112IM or 108IM require the 105x60 horn for acoustic coverage, then the horn included (the ET-60x40 or ETS 60x40) in the HWK is not used, and only the vent plugs should be used. (The ET-105x60 and the ETS-105x60 do not employ the side wall holes as they are low Q designs and the column of air bounded by the horn walls is not resonant in a practical sense)

The 212CIM and 208CIM are coaxial high frequency designs and only require the low frequency enclosure vents to be plugged. **NOTE: The One Systems 212IM-L line array is a closed box by design and does not require a harsh weather kit!**

Figure 1 is an example of the location of the vent plugs in a One Systems 112IM

# PROCEDURE

1. Remove the grill assembly from the enclosure

2. Remove the high frequency horn from the enclosure
1. NOTE: This step applies only if the installed high frequency horn is either an ET-60x40 or an ETS-60x40

2. Disconnect the compression driver from the high frequency horn (see note above, this step may not be necessary). Note the driver wiring polarity and insure the same polarity is observed when reconnecting the driver.

3. Connect the compression driver to the ET-60x40 (or ETS-60x40) and re-install the high frequency horn in the enclosure.

4. Install the vent plugs in ALL enclosure vents.

5. Re-install the grill assembly on the enclosure.

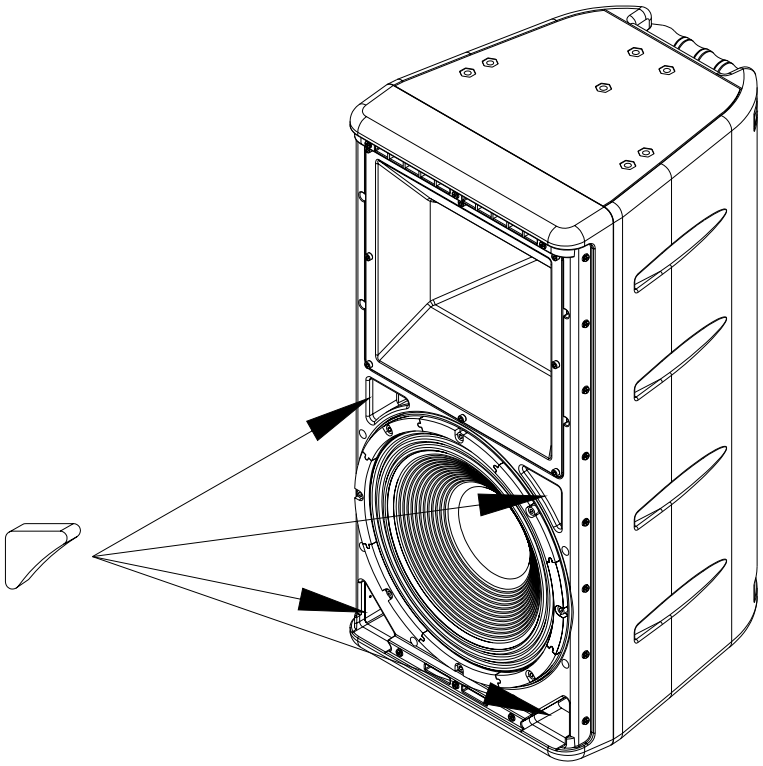

Figure 1

# One Systems “EYE” BOLT KITS

ONE SYSTEMS offers a wide variety of enclosures that are compatible with M10 forged shoulder “eye” bolt suspension. (M8 for the 108IM and 208CIM) ONE SYTEMS offers a complete kit that consists of 4 forged shoulder eye bolts and all necessary additional hardware. Each eye bolt is made of stainless steel and is suitable for both outdoor permanent installation and indoor applications.

Suspending any product should only be attempted by individuals experienced and familiar with safe suspension practices. Installation of eye bolts requires a complete understanding of not only national and local codes for suspension of products, but also requires a complete understanding of the structural limitations and proper orientation of eye bolts. Information of eye bolt structural ratings can be found at www.onesystems.com. (“ONE SYSTEMS eye bolt kits”) This information is available under the “Education” tab of the ONE SYSTEMS web site and is listed along with other technical papers by One Systems. This information should be read and understood prior to attempting to suspend any products.

In addition, it is necessary to read and understand “Rigging and Suspension of ONE SYSTEMS Products”. This information is also available at www.onesystems.com, and can be found in the “Education” section of the web site under the “Education” tab.

NOTE: Eye bolt strength ratings vary with pull angle. It is extremely important to observe appropriate pull angles when suspending any object with Eye bolts.

The figure below illustrates allowed pull angles. Suspending any object with eyebolts should always be done to insure the resultant forces are within the allowed pull angles as shown below. The maximum rating of the Eye bolt is in a 0 degree pull. The rating decreases as the pull angle goes from 0 degrees to 45 degrees. Any pull angles between 45 degrees and 90 degrees are not allowed!

Off axis pulls are not allowed, as shown below!

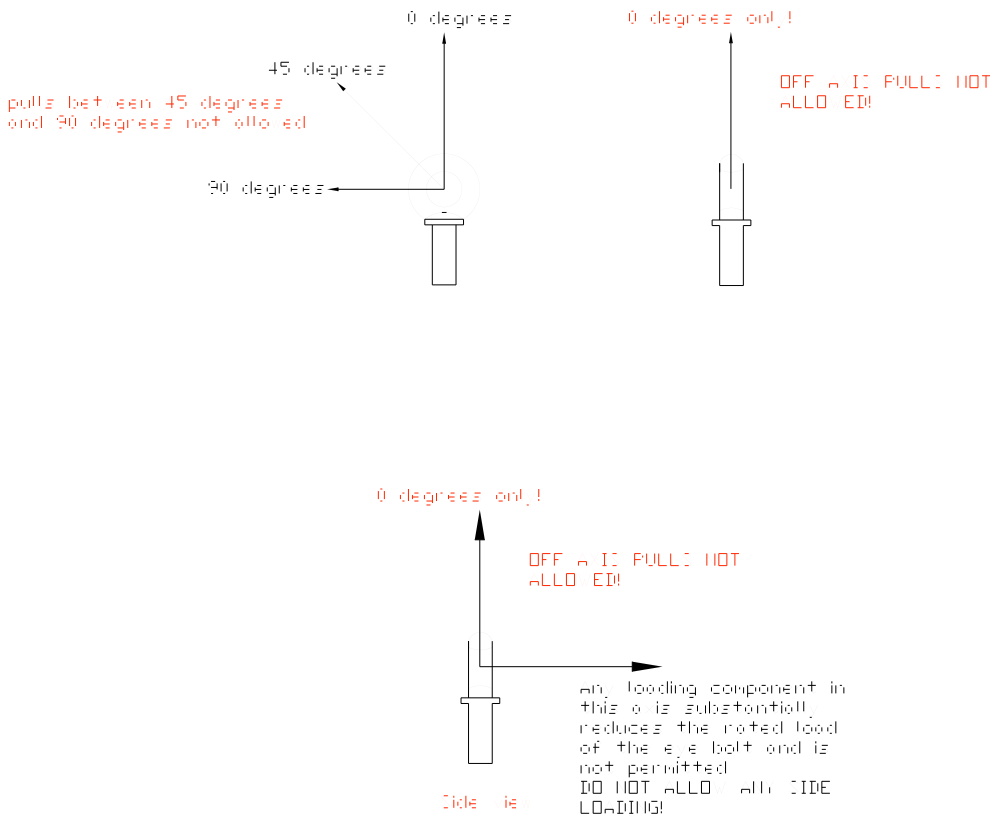


Warning: Do Not Substitute parts. Use only the One Systems M10 or M8 eye bolt kits!

For One Systems 108IM and 208CIM enclosures two (2) “eye” bolts must be used for either a top mount, of if the enclosure is rotated into an “upside down” configuration, a bottom mount configuration. This is shown below in figure 1.
The One Systems model number for the M8 eye bolt kit is ***Eye Bolt Kit M8.***

For the One Systems 112IM and 212CIM a total of three (3) M10 “eye” bolts must be used for either a top mount or bottom mount (if the enclosure is “upside down”) configuration, as shown in figure 2 below.

For the One Systems 212IM and 312CIM a total of four (4) M10 “eye” bolts must be used, as shown in figure 3 below.

The One Systems Eye Bolt kit suitable for the IM series enclosures is model number ***Eye Bolt Kit***. In addition, the model number ***Eye Bolt Kit – 25*** should be used in conjunction with the Pole Mount System, Pole Mount System EX and PT70 safety link.

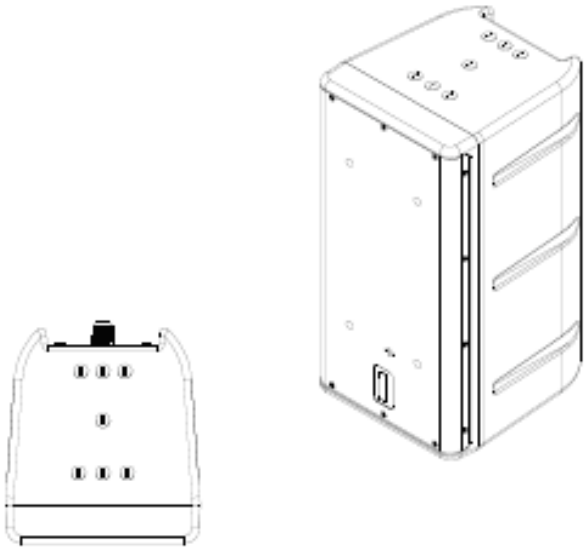

Figure 1
108IM and 208CIM
2 eye bolts must be used

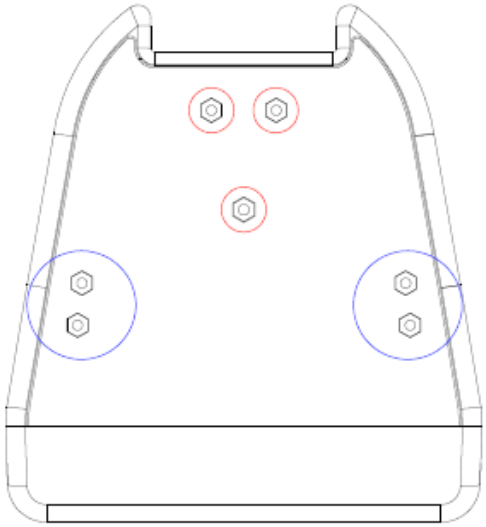

Figure 2
112IM and 212CIM
2 of the points circled in blue and at least 1 of the points circled in red must be used

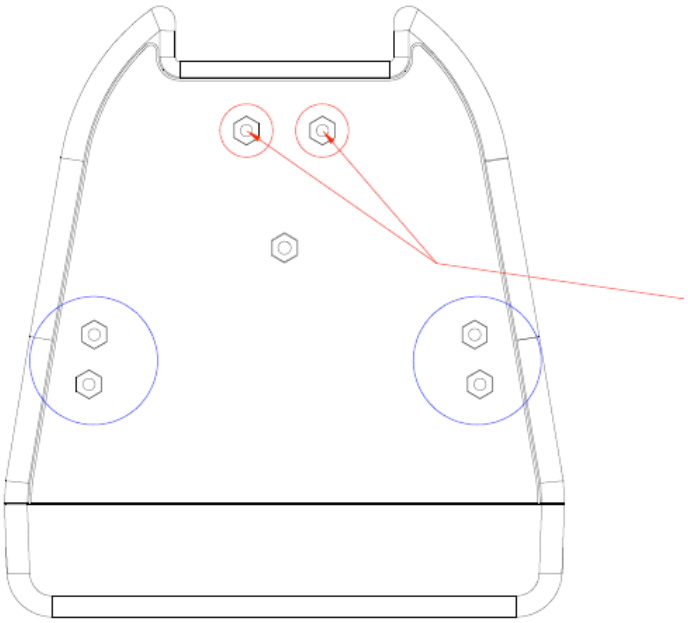

Figure 3
212IM and 312CIM
A total of 4 eye bolts must be used
The rear two points circled in red MUST be used.

One Systems wood enclosures are also capable of being suspended using the Eye Bolt kit “W” versions. The M10 Eye Bolt kit suitable for use with One Systems wood enclosures are model number ***Eye Bolt Kit - W***.

The One Systems 112UM and 115UM must be suspended using a minimum of 2 eye bolts. The systems may be suspended either vertically or horizontally. Figure 4 illustrates the rigging points for both the 112UM and the 115UM.

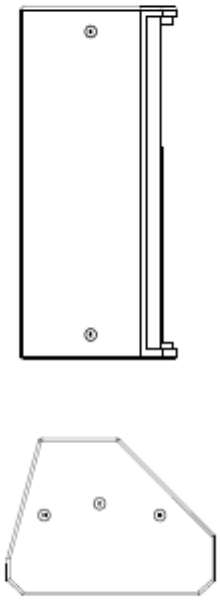

Figure 4
112UM and 115UM
2 eye bolts must be used

The 115RW requires 4 eye bolts be used for either vertical or horizontal suspension as shown in Figure 5 below.

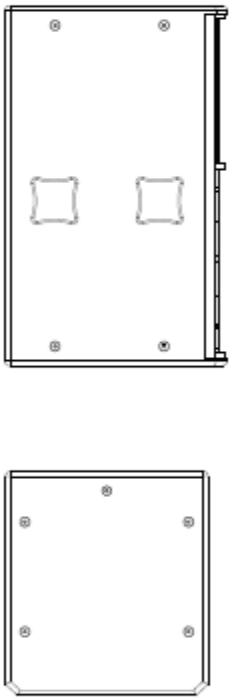

Figure 5
115RW
4 eye bolts must be used

The 115TW requires a total of 4 eye bolts for vertical suspension. *Horizontal suspension of the 115TW is not allowed using eye bolts.*

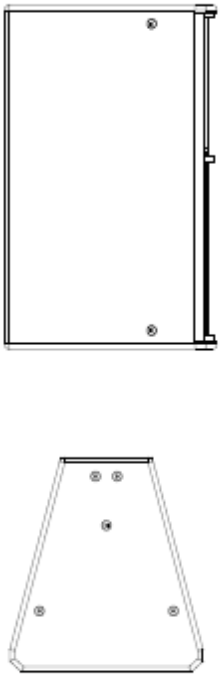

Figure 6
115TW
4 eye bolts must be used for vertical suspension
*Horizontal suspension is not allowed*

The One Systems 215RW requires 4 eye bolts for either vertical or horizontal suspension.  Figure 7 represents this required configuration.

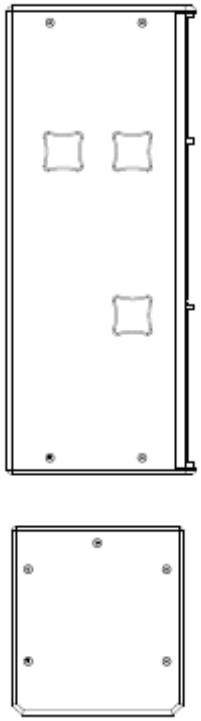

Figure 7
215RW
Requires 4 eye bolts for either vertical or horizontal suspension.

The One Systems 212Sub-W requires 4 eye bolts for vertical suspension as shown in Figure 8 below.

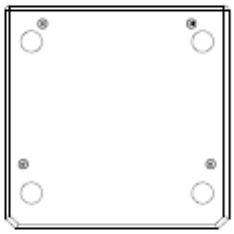

Figure 8
The 212Sub-W requires 4 eye bolts for vertical suspension

The One Systems 118Sub-W requires 4 eye bolts for vertical or horizontal suspension as shown in Figure 9.

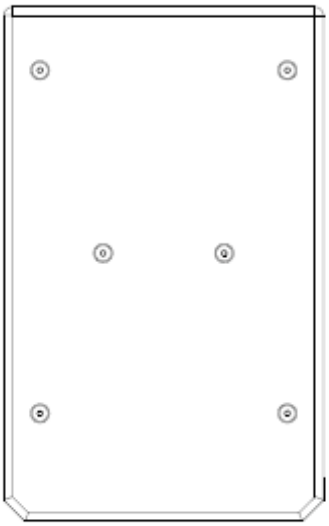

Figure 9
118Sub-W
Requires 4 eye bolts for either vertical or horizontal suspension

The 218Sub-W requires 6 eyebolts for vertical or horizontal suspension as shown in Figure 10.

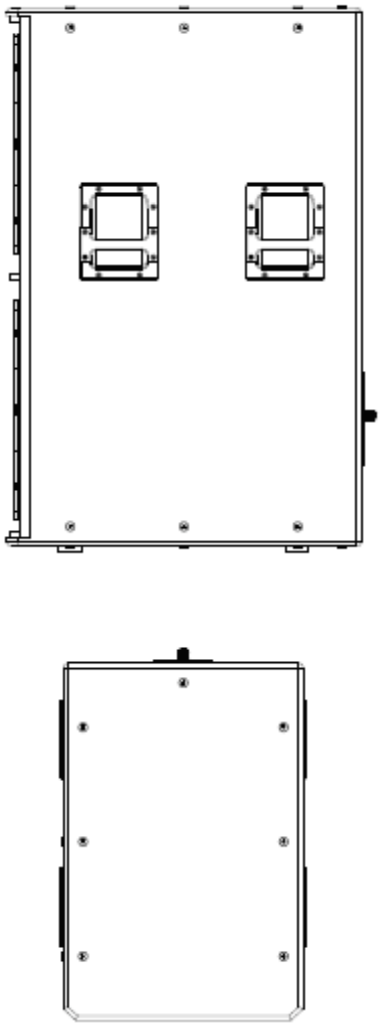

Figure 10
218Sub-W
Requires 6 eye bolts for either vertical or horizontal suspension.

# INSIDE ONLY VOICE COILS

The function of a loudspeaker is to convert electrical energy to an analogous acoustical energy. This conversion process takes place in two steps. The first step is the conversion from electrical energy to mechanical energy. The second step is a conversion from mechanical energy to acoustical energy.
The first step consists of generating a mechanical displacement proportional to the electrical input signal. The second step consists of coupling the mechanical displacement of the system to the surrounding air via some mechanism, such as a diaphragm, usually referred to as a cone.

A class of loudspeakers known as electro-dynamic employs a combination of permanent magnet and electro magnet to produce the conversion of electrical to mechanical energy. The permanent magnetic structure in this type of loudspeaker utilizes a permanent magnetic material, such as neodymium iron boron, aluminum nickel cobalt, or other rare earth or ceramic materials, that is placed in a “magnetic circuit”. This “circuit” consists of a plate of low carbon steel on the north magnetic pole of the permanent magnet and another plate of low carbon steel on the south magnetic pole of the permanent magnet. Either the plate on the north magnetic pole or the plate on the south magnetic pole is shaped to provide a small magnetic gap. This magnetic gap is usually annular in geometry but need not necessarily be of an annular geometry to be functional. The “magnetic gap” then has a high magnetic field strength. The low carbon steel plates act to concentrate the magnetic field in a volume of space known as the magnetic gap.

The electro magnet portion of the transducer consists of a length of electrical conductor. When a time varying electrical current flows through the conductor a magnetic field is produced around the wire and that magnetic field is proportional to the magnitude of the electrical current flowing through the wire. It is a common practice to form the length of electrical conductor into a coil. This coil is usually referred to as the Voice Coil. If the permanent magnetic gap is an annular geometry then the electro magnet coil may be immersed into the permanent magnetic gap. This gives rise to a force of interaction between the permanent magnetic field and the electro-magnetic field. This force is known as the Lorentz force and is shown in algebraic form as $F=BLi$ where F is the force of interaction between the two magnetic fields. B is the magnitude of the permanent

magnetic field and L is the length of wire immersed in the permanent magnetic field and associated with the coil. “i” is the magnitude of the electrical current flowing thru the wire.
The force of interaction between the permanent magnetic field and the electro-magnetic, or coil, will produce an acceleration in accordance with Newton’s laws of motion.

Figure 1 is a typical magnetic circuit known as a “Pot Core” style. The permanent magnetic material (shown in red) has a soft piece of low carbon steel known as a Pole Tip and the top is relative to the magnetic axis of the permanent magnet. The low carbon steel “return path” is located on the opposite side from the pole tip and is also on the magnetic axis of the permanent magnet. The return path is formed to produce a Magnetic Gap, as shown in figure 1. The electro-magnet or voice coil is then immersed in the permanent magnetic gap as shown in figure 1.

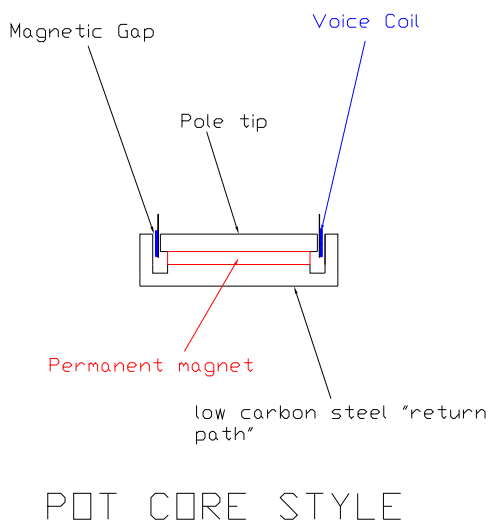


FIGURE 1

The second common permanent magnet structure geometry is shown in figure 2. This style is sometimes referred to as a “pancake” style. This style of permanent magnetic structure performs an identical function to the pot core style in that the low carbon steel return path and front plate still act to form an annular magnetic gap. The voice coil is then immersed in the magnetic gap and the result is a force of interaction between the electro-magnetic voice coil and the permanent magnet field.

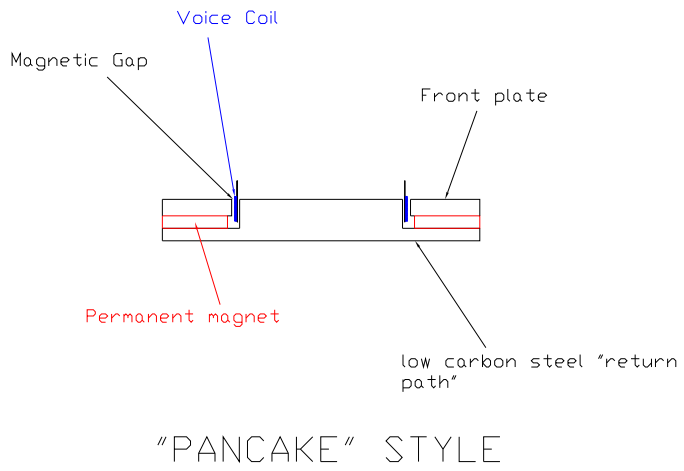


FIGURE 2

In both figures 1 and 2, the force of interaction will produce a physical displacement of the voice coil. This physical displacement will be a function of the polarity of the permanent magnetic field and the polarity of the time varying electrical current flowing thru the voice coil. The direction of the voice coil displacement will be either up or down along an axis as shown in figure 3.

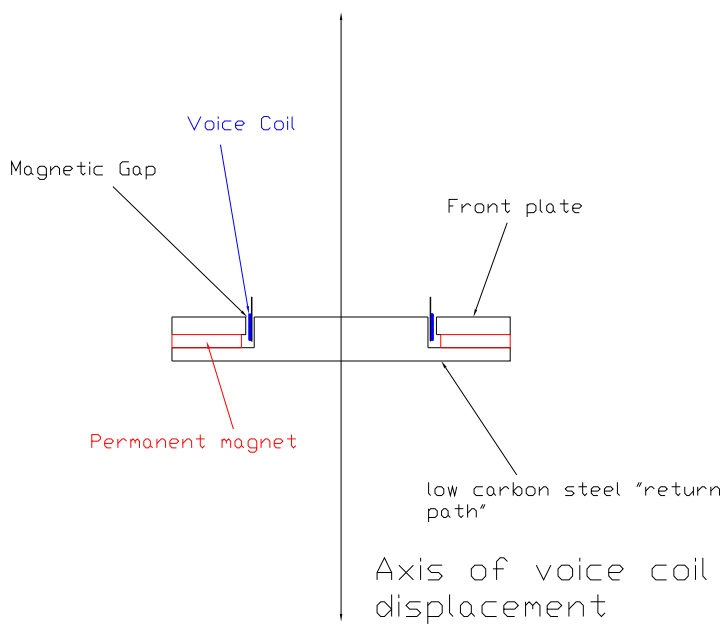


FIGURE 3

The ability of the loudspeaker to convert electrical signals to proportional mechanical displacements and subsequently to acoustical energy is often referred to as the conversion efficiency of the transducer, or loudspeaker. The conversion efficiency is proportional to Lorentz force as well as the total moving mass of the loudspeaker, including voice coil, cone, dust cap, and all parts of the transducer that move relative to the permanent magnet structure and frame.

The efficiency of loudspeakers, like all transducers, can be rated as a percentage of the input power to the output power. Typical loudspeakers can range from less than 1% efficient to over 30%. The conversion efficiencies approaching 30% are for a specific type of loudspeaker referred to as compression driver. Typical (non compression driver) loudspeakers range from 1% to 5% efficiency but can be lower or higher as well. These efficiency levels relate the ratio of the electrical input to the acoustic output. As an example, 100 electrical watts of power are typically converted to 3watts to 4 watts of acoustic power for a 3% to 4% efficient loudspeaker. The remaining electrical power is converted to heat.

Loudspeaker voice coils can be heated to temperatures of over 450 F degrees (232C). These heat levels are extreme and can produce device failure due to degradation of the adhesive systems used to bond the voice coil to its carrier as well as the adhesives used to bond each turn to the next on the voice coil itself. In addition to device failure, the voice coil DC resistance is also affected by heat. Every alloy of conductor has a Temperature Coefficient of Resistance. This coefficient relates the temperature of the conductor to the dc resistance of the conductor. As the temperature increases, the dc resistance of the conductor also increases. As the dc resistance increases the current flow thru the conductor decreases and is described by Ohms law, where V=I/R.
Where V is the applied voltage across the voice coil, I is the current flow thru the conductor (voice coil) and R is the dc resistance. As mentioned earlier, the force of interaction between the permanent magnet and the electro-magnet (the voice coil) is proportional to the current flow thru the coil. If the dc resistance of the voice coil is raised due to heating, then the current draw reduces and, as a consequence, the Lorentz force is reduced.

The change in Lorentz force as a function of dc resistance change/heating is referred to as Power Compression. As the electrical power applied to the voice coil increases the temperature of the voice coil increases. This increase in voice coil temperature increases the dc resistance and will reduce the current flow thru the voice coil. As the Lorentz force decreases due to reduced current flow the overall loudspeaker conversion efficiency is reduced.

It is desirable to minimize the heat rise associated with current flowing through the voice coil. Technical reviews of the heat produced by voice coils and subsequent performance alterations can be found in various professional journals. “Heat Dissipation and Power Compression in Loudspeaker”, Douglas Button, J. Audio Eng. Soc., Vol. 40, No.1/2

1992, and “heat Transfer Mechanisms in Loudspeakers: Analysis, Measurement, and Design”, Clifford a. Henricksen, J.Audio Eng. Soc., Vol 35, No. 10, 1987 are typical examples of theoretical analysis and measurement of the thermal effects of loudspeaker voice coils.

A loudspeaker voice coil is comprised of a length of electrical conductor, typically copper or aluminum or some other alloy. The wire is wound into the shape of a coil whose dimensions are compatible with the dimensions of the permanent magnet gap as shown in figure 1. The coil is typically wound on a material known as a “bobbin” or “former”. This bobbin acts to support the voice coil and at its upper end serves as a location to bond the diaphragm, or cone. The bobbin material may be made from a polymer, heat resistant fabric, fiberglass prepreg, or aluminum. With the exception of an aluminum bobbin, all other materials also act as a thermal insulator and, as a result, the majority of the heat generated by the voice coil can only be effectively dissipated toward that portion of the voice coil away from bobbin. In the case of an aluminum bobbin the material itself can act as a good thermal path but the material is electrically conductive and the electrically conductive nature of the material allows “eddy currents” to be generated in the bobbin. These eddy currents are a secondary source of heat generation and they also produce magnetic fields that are of opposite polarity and will act to modulate and mitigate the primary electro-magnetic field. For this reason aluminum or other electrically conductive bobbins are rarely used in modern loudspeakers.

Figure 4 is an illustration of typical voice coil/bobbin configurations. The voice coil wire may be rectangular, round (both shown below), square, or any other geometry. Historically, voice coils have been wound on the outside surface of the cylindrical bobbin. Recently voice coils have been wound on both the outside and inside surface as shown below. These are referred to as “inside/outside” voice coils.

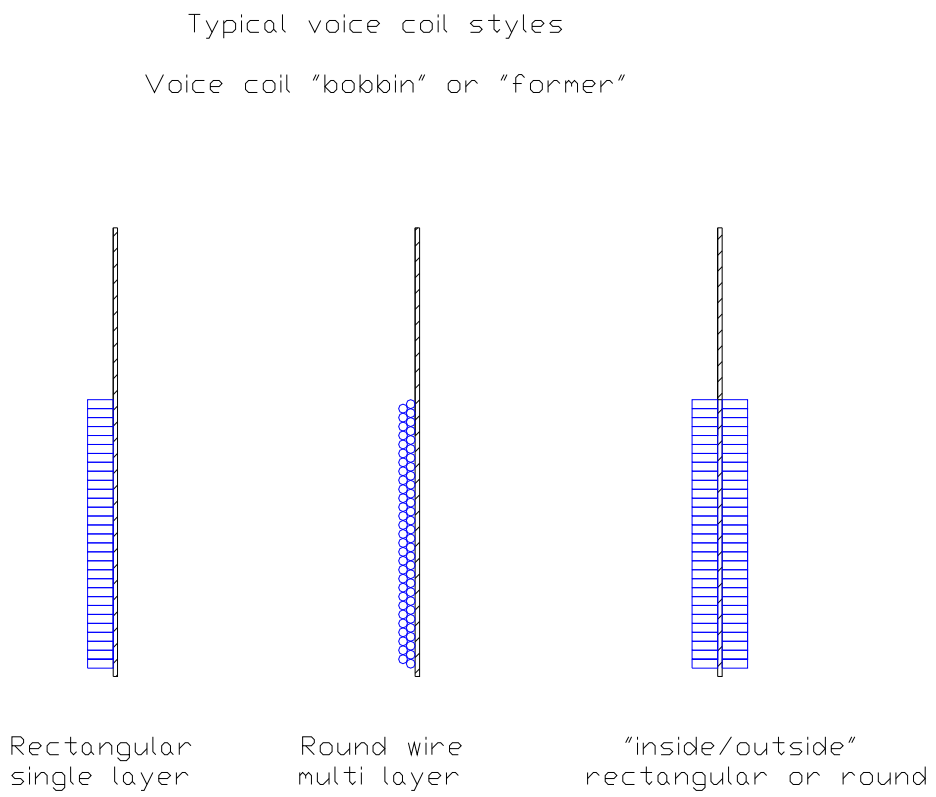


FIGURE 4

As can be seen in figure 4, the bobbin is represented by the black section to the right of the voice coil wire (shown in blue). The rectangular single layer coil offers excellent cooling except for the area where the bobbin is located. The round wire multi layer coil consists of 2 or more layers of round cross section wire. Because each layer of wire is surrounded by the wire insulator it will not cool as well as the single layer voice coil construction. Multi layer voice coils also have more turns than an equivalent single layer construction and, as a result, exhibit higher inductance which will affect the amplitude response at higher frequencies.

The “inside/outside” voice coil construction seeks to improve multi layer cooling by locating one layer to the outside of the bobbin and the second layer on the inside of the bobbin. This approach will offer improved cooling when compared to the multi layer “outside only” construction but still suffers from higher inductance as compared to the single layer design.

Loudspeaker voice coil heating/cooling is determined by several factors. One mechanism is conduction thru the magnetic gap to the surrounding low carbon steel return path.

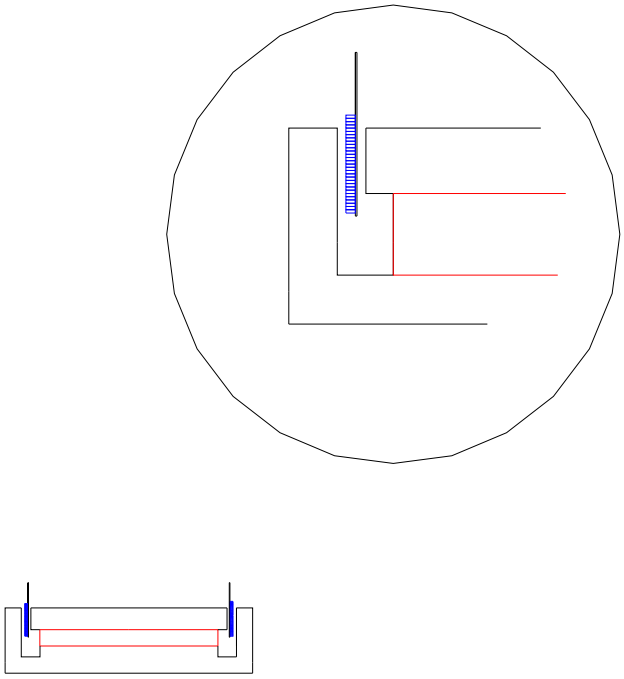

FIGURE 5

Figure 5 shows a pot core style design with the magnetic gap area enlarged for clarity. The voice coil and bobbin are “immersed” in the magnetic gap. The magnetic gap is defined by the inside diameter of the pot core and the outside diameter and height of the pole tip. The vertical height of the voice coil is made longer than the height of the magnetic gap in order to provide for a constant Lorentz force versus displacement. (i.e. for reasonable displacements a constant length of wire in the magnetic gap will produce a constant Lorentz force). The exact vertical height of the voice coil is a design parameter and will be a function of the desired linear displacement limits of the loudspeaker.

Figure 6 represents another enlargement of figure 5. The voice coil bobbin is shaded in black. The area to the inside, between the inside diameter of the bobbin and the outside diameter of the pole tip would represent a good path for conduction except that the bobbin is a thermal insulator. The voice coil in this drawing is a single layer rectangular wire coil and is shown in blue. The area shown in turquoise is a good heat conduction path. This is the area where the outside portion of the voice coil is in close proximity to the inside diameter of the pot core. The area shown in red, above the turquoise represents an area of poor conduction. The wire that extends above the pot core height is not in close

proximity to a portion of high thermal capacitance. This area will be hotter than that portion of the voice coil that is in close proximity to the pot core.

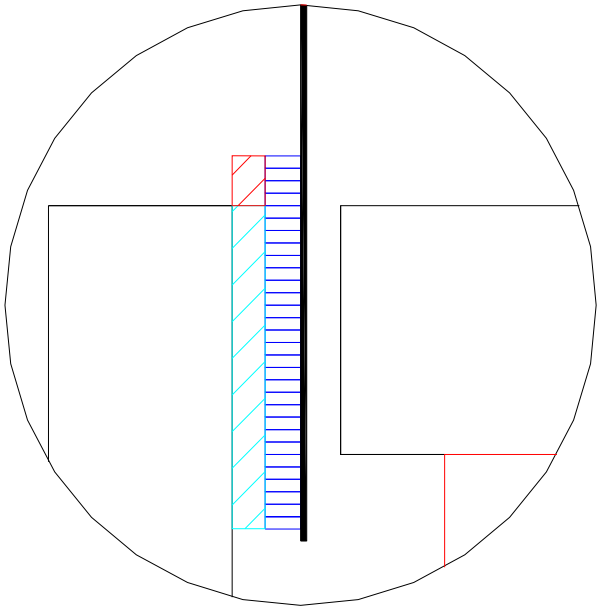

FIGURE 6

A common solution to the problem highlighted in figure 6 is shown below in figure 7.

It can be seen that a good solution is to extent the height of the pot core to extend beyond the vertical height of the voice coil. In this implementation the voice coil, regardless of vertical displacement, is always in close proximity to the inside diameter of the pot core. The magnetic gap is essentially unchanged and can actually be made more symmetric about the center horizontal center line of the pole tip.

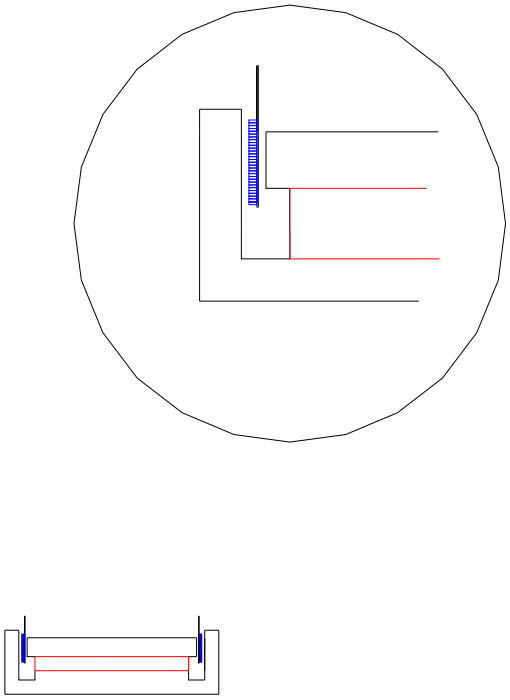

FIGURE 7

It can be seen in the above figure that the pot core vertical height now extends beyond the rest position of the voice coil and in fact can be made high enough to provide good conduction for large vertical displacements. For this design to be successful the voice coil suspension elements (commonly referred to as a spider) must be spaced high enough on the bobbin in order to prevent the under side of the suspension from physically hitting the top of the pot core. This technique is very effective in providing good thermal conduction.

Pot core designs are very efficient magnetically but suffer from a basic geometric flaw. If high Lorentz forces are required a large permanent magnetic field is required in the magnetic gap. A pot core design does not easily allow for the permanent magnet material to be of a large cross sectional area. The permanent magnet can be made larger in diameter but expensive and large additions of return steel are required to “neck down” the large magnet cross section to accommodate the outside diameter of the pole tip. (This technique was used frequently with ALNICO permanent magnets). Modern ultra high energy product permanent magnets, such as Neodymium Iron Boron must be relatively thin in their magnetic axis and this typically sets the geometry as shown in figure 1.

A good solution for increasing the permanent magnetic field is to use a “pancake” design as shown in figure 2. The “pancake” geometry allows the permanent magnet material

cross section to be as large as necessary or as large as manufacturing methods permit. Figure 8 is an enlarged view of a pancake design.

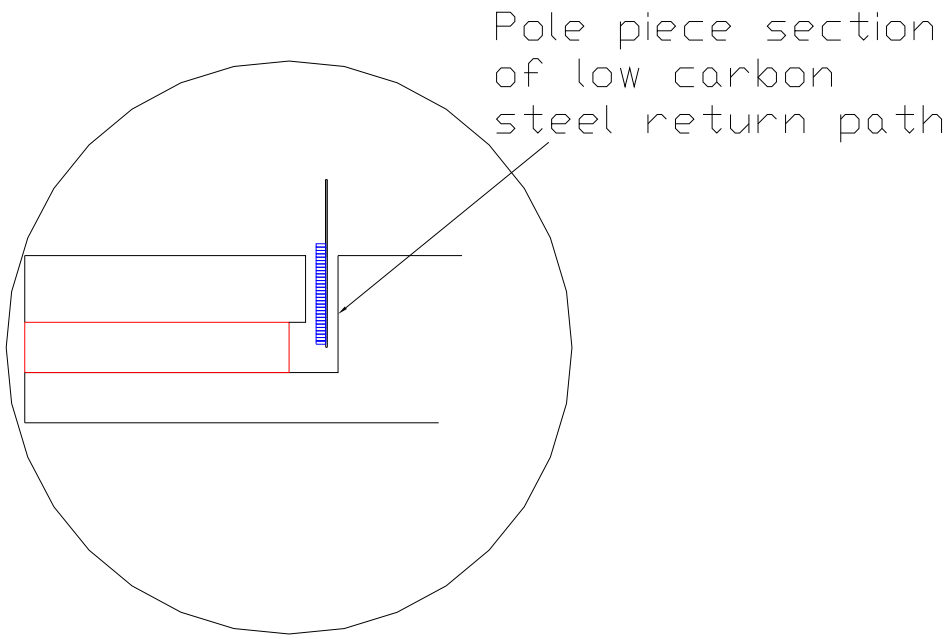


FIGURE 8

The enlarged view shown above illustrates the basic design concept. In this view the voice coil is shown vertically centered in the magnetic gap. The magnetic gap is defined by the outside diameter of the pole piece and the inside diameter and vertical height of the front plate. The vertical height of the voice coil extends both above and below the vertical height of the front plate and allows a relatively constant Lorentz force versus displacement as long as the displacement 0 to peak value is within the expression:

(voice coil vertical height –front plate vertical height)/2

The sections of the voice coil that extend beyond the vertical height of the front plate are referred to as coil overhang. The portions of the coil the extend beyond, or over hang, the vertical height of the front plate will suffer from poor thermal conduction. Just like the

case represented in figure 6, for the pot core geometry, the coil sections that extend beyond the vertical height of the front plate will not be as cool as the portion in close physical proximity to the inside diameter of the front plate. The geometry of the pancake design is fundamentally different than that of the pot core design. Figure 7 shows the vertical extension of the pot core height and the associated additional thermal conduction. The physical height of the magnetic gap is maintained in figure 7 because the pole tip thickness defines the gap height.

Because the voice coil bobbin is a thermal insulator, the most effective conduction path still exists on the outside of the voice coil. To improve cooling in the pancake design the front plate thickness must be increased. Increasing this thickness, however, now modifies the magnetic gap and will produce an asymmetrical distribution of magnetic flux. This asymmetry will produce an asymmetrical Lorentz force that varies with voice coil displacement.

As shown in figure 4, another type of voice coil construction is the “inside/outside” style. This is shown in figure 9. It can be seen that in either design there are compromises in the thermal conduction of heat. The inside/outside design suffers in that the inside portion of the voice coil still presents cross sectional area both above and below the vertical height of the  pole tip where thermal conduction is less than optimal. The pancake design has the same condition expect now the area of poor conduction is associated with the outside wind where the coil is “overhanging” both above and below the vertical height of the front plate.

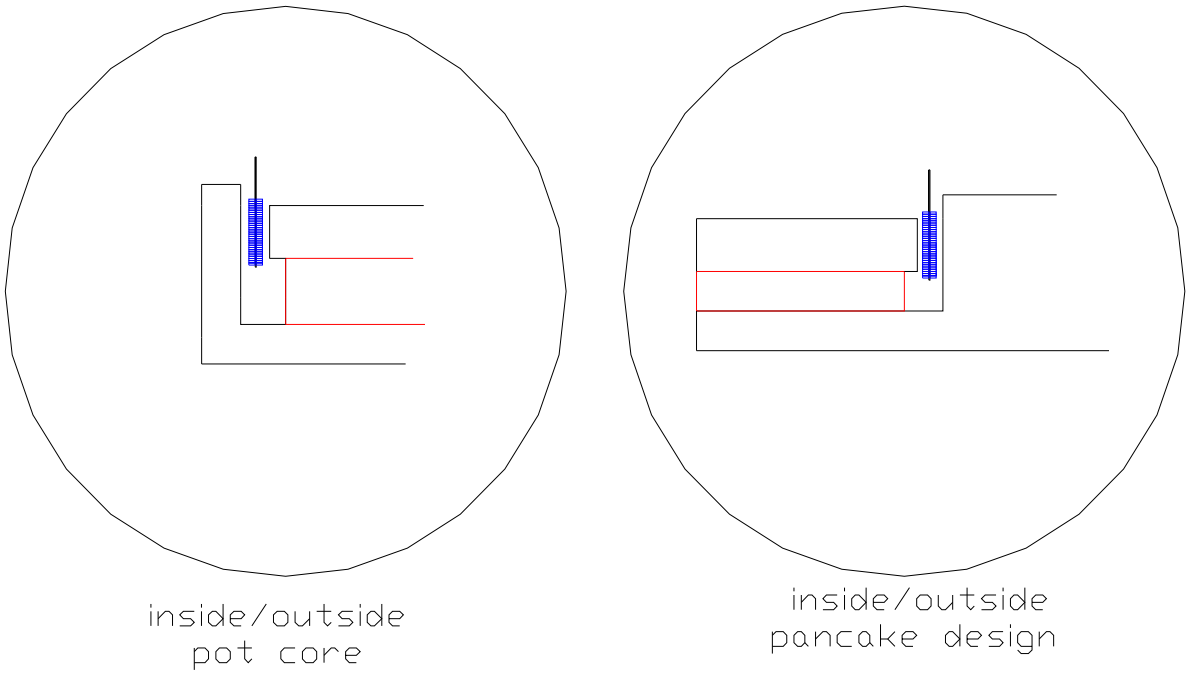


FIGURE 9

Prior art designs have attempted to deal with the thermal issues associated with the pancake design while still maintaining the magnetic gap symmetry but adding thermally conductive heat sinks above, below, and sometimes both above and below the front plate as shown in figure 10. The green shaded portions of figure 10 represent sections of thermally conductive material, typically aluminum both above and below the front plate. These are effective although the low electrical resistance associated with aluminum will allow large eddy currents to be induced into the “heat sinks” and become a secondary source of heat generation. In addition to the secondary generation of heat these additional parts represent additional expense and complexity. It is also not possible to accurately locate these parts and make them radially concentric with the front plate without adding a machining step to the assembly operation after all of the parts have been assembled but prior to the application of a protective coating (i.e. electroplating, e coating etc). This secondary machining operation is the only effective way to accurately insure that the inside diameter of the upper and lower heat sink pieces match the inside diameter of the front plate. It is typical to make the heat sink diameters of a larger inside diameter to avoid mechanical interference with the voice coil. Increasing this inside diameter reduces the proximity of the heat sink to the outside diameter of the voice coil and reduces thermal conduction.

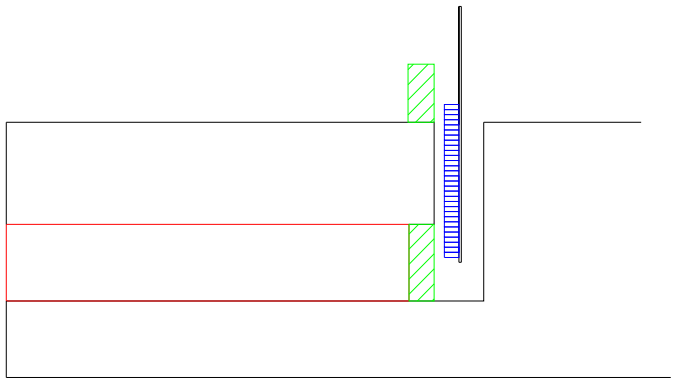

FIGURE 10

A new method is proposed that will wind the electrically conductive voice coil wire on the inside of the voice coil bobbin. Referred to as “inside only” technology, this novel approach offers the same level of thermal conduction that the pot core design offers but will allow the permanent magnet area and volume to be as required for high permanent magnetic field designs by utilizing the pancake style desing. This geometry is illustrated in Figure 10. The voice coil is wound on the inside of the bobbin and the pole piece portions of the low carbon steel magnetic return path may be made as tall as required. This height, in a preferred embodiment will always be higher than the maximum physical displacement, or excursion, of the voice coil assembly. This will insure good thermal conduction regardless of physical displacement. This geometry does not alter the permanent magnet gap volume or symmetry. A disadvantage of the tall pot core design, as mentioned earlier, is that the suspension elements attached to the upper portion of the voice coil bobbin need to be physically spaced away from the top of the pot core so that the underside of the suspension elements do not touch the top of the pot core during maximum excursions. An advantage of the new inside only designs is that the suspension elements are not located on the inside diameter of the coil and, as a result, will not hit the top of the pole piece. A part of the diaphragm knows as the “dust cap” is attached to the diaphragm above the pole piece but this part is easily spaced away from the top of the pole piece to allow for sufficient maximum required displacements.

In conventional designs, it is a common practice to make the gap between the inside diameter of the bobbin and the outside diameter of the pole tip (for pot core designs) or the pole piece (for pancake designs) smaller than that gap between the outside diameter of the voice coil and the inside diameter of the pot core (for pot core designs) or the front plate (for pancake designs). This is done to allow the voice coil assembly to expand physically as it heats. This conventional method requires more space on the outside of the coil so that as the voice coil assembly increases in diameter it will not come into contact with the inside diameter of the pot core or front plate. If the voice coil wire touches the pot core or front plate it will produce an audible rub, or distortion, and frequently will produce a catastrophic failure of the loudspeaker by producing an electrical short circuit or open circuit.
The conventional design geometry allows the voice coil to expand toward the pot core or front plate.
The unique geometry of Inside Only technology allows the voice coil to expand away from the pole piece or pole tip rather than toward it. This geometry will result in a rubbing of the voice coil bobbin on the inside diameter of the front plate. This arrangement will act to prevent catastrophic electrical failures from occurring.

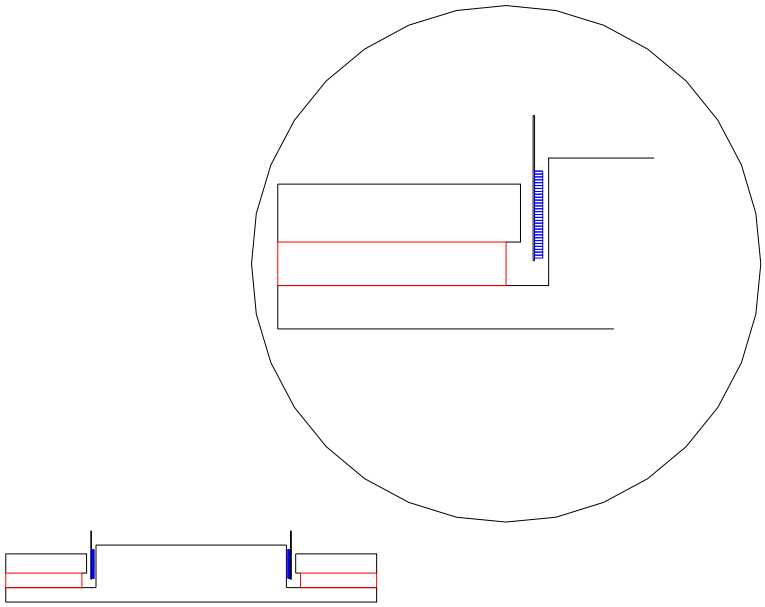

FIGURE 10
INSIDE ONLY TECHNOLOGY

What is described is a unique and cost effective method to provide an increased thermal conduction to a loudspeaker voice coil. Prior art methods are described and each method is associated with its individual short comings. Inside Only technology offers high thermal conductivity for the entire vertical voice coil height. It can easily provide for cooling regardless of voice coil physical displacement. It can equal the cooling provided by pot core designs but has the advantage of being able to accommodate larger permanent magnet cross sections, and hence physical volumes to provide for higher permanent magnetic fields in the magnetic gap. Inside only designs do not require the spacing of the loudspeaker suspension elements to be spaced farther away from the top of the voice coil to accommodate the increased height of the pot core as is the case with pot core designs. Inside Only technology offers superior protection from catastrophic rubs and electrical short and open circuit failures.

Inside Only voice coil designs provide for excellent thermal conduction while also allowing the use of pancake style permanent magnet designs.

**One Systems USA, Inc.** * 6204 Gardendale Dr. * Nashville, TN 37215
**One Systems Group Co. Ltd.** * European Division * Mittelsmoorer Strasse 12 * 28879 Grassberg German
**One Systems Global Co., Ltd**. * 87/114 Modern Town 15th Floor * Sukhumvit 63, Ekkamai Soi 3, Klongtoey, Bangkok, 1010 Thailand

# INTER-CHANGEABLE HIGH FREQUENCY HORNS

ONE SYSTEMS® offers a choice of high frequency horn patterns that enable our loudspeaker systems to be optimized for variety of acoustic spaces. The axial response associated with each horn requires specific equalization to properly match the acoustic response with the associated low frequency device. This occurs because the acoustic loading of the horn is altered as the radiation pattern is changed.

ONE SYSTEMS enclosures are shipped from the factory with the 60 degree by 40 degree high frequency horn installed. Depending upon the specific enclosure model, this will either be the ET-60/40 or the ETS-60/40

To optimize the frequency response, the high frequency crossover must be changed as the horn is changed. Many ONE SYSTEMS multi way systems offer a choice of high frequency horns and, as a consequence, certain passive crossovers contain a jumper configuration that provides optimized amplitude response. These products include the 112IM and the 115TW (and 115RW).

In addition to changing the high frequency horn and the jumper position to match the specific horn, the polarity of the compression driver must be adjusted. When the ET-60/40 horn is used, the compression driver must be “normal”. This means that the positive high frequency lead wire from the crossover printed circuit board must be connected to the POSITIVE terminal of the compression driver. When the ET-105/60 high frequency horn is used, the polarity of the compression driver must be “REVERSED”. This means that the positive high frequency lead wire from the crossover printed circuit board must be connected to the NEGATIVE terminal of the compression driver.

In addition, the 112IM enclosures also required another modification. When the 112IM is shipped from the factory the ET-60/40 high frequency horn is installed. In the 112IM, the ET-60/40 horn has two very unique holes in the horn side walls. These holes produce a very positive time domain correction on the system and require that one of the top two vents in the 112IM enclosure be closed. (It is closed at the factory during final assembly with closed cell acoustic foam “barriers”).

When the ET-105/60 high frequency horn is installed this vent must be removed from the enclosure. Figure 1 shows the location of the vent.

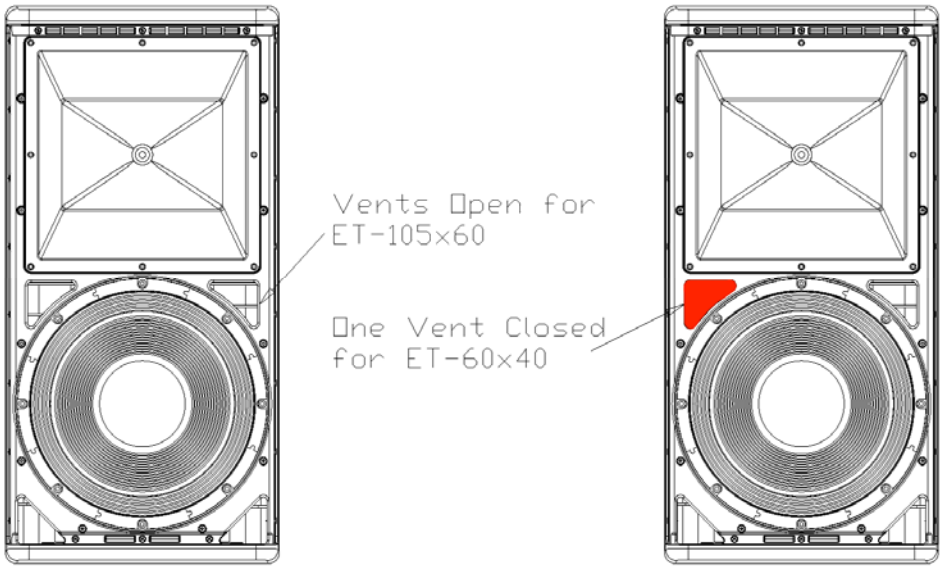


Figure 1

Vent Plug (112IM Only)

The “jumper” that configures the crossover is easily visible on the rear of the crossover input plate assembly. The two positions are labeled “64” and “105”. The enclosure is shipped from the factory with the jumper in the “64” position since the enclosure, as supplied, has the ET-60/40 (or ETS-60/40) horn installed. If the ET-105/60 (or ETS-105/60) horn is to be installed, the jumper must be moved to the “105” position.

The illustration (Figure 2) below shows a typical ONE SYSTEMS passive crossover assembly. The jumper is shown in the “64” position in this example.

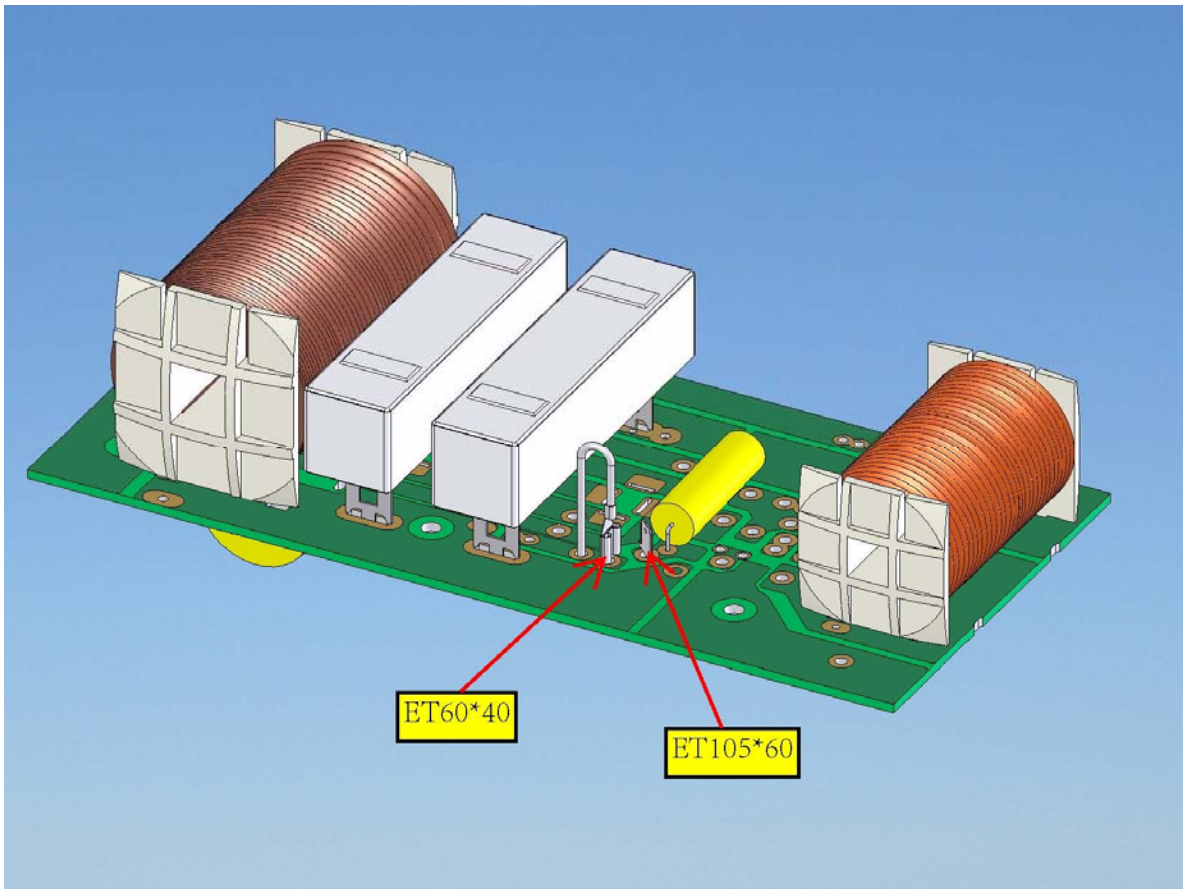


Figure 2

ONE SYSTEMS PCB with Jumper for Interchangeable High Frequency Horns

# INTERCHANGABLE HORN PROCEDURE SUMMARY

1. REMOVE EXISTING HORN AND REMOVE COMPRESSION DRIVER

2. MOUNT COMPRESSION DRIVER ON NEW HORN. OBSERVE CORRECT POLARITY.
   NORMAL FOR ET-60/40
   REVERSE FOR ET-105/60

3. CHANGE CROSSOVER PRINTED CIRCUIT BOARD JUMPER TO CORRECT POSITION AS SHOW ABOVE

4. OBSERVE PROPER ACOUSTIC PLUG PLACEMENT (112IM ONLY)

   FOAM PLUGS SHOULD BE IN TOP VENTS IF ET-60/40 USED
   FOAM PLUGS SHOULD BE REMOVED IF ET-105/60 USED

ONE SYSTEMS®

**One Systems USA, Inc.** * 6204 Gardendale Dr. * Nashville, TN 37215
**One Systems Group Co. Ltd.** * European Division * Mittelsmoorer Strasse 12 * 28879 Grassberg German
**One Systems Global Co., Ltd**. * 87/114 Modern Town 15th Floor * Sukhumvit 63, Ekkamai Soi 3, Klongtoey, Bangkok, 1010 Thailand

ONE SYSTEMS®

# How Far will that Speaker “Throw”?

Sound reinforcement systems are characterized by a wide variety of technical specifications. Although the term ‘throw” is not a technical specification the term is frequently used to describe a specific performance parameter. A frequent question is “How far will this speaker ‘throw’”?

Unfortunately, the answer to this question requires additional information before it can be properly answered. The “throw” question is asked in order to try and understand a loudspeaker system’s ability to project some specific sound pressure level (SPL) over some specific distance. There are specific system performance parameters that must be considered, such as the system 1 watt at 1 meter sensitivity and the system power handling. (NOTE: The system 1 watt at 1 meter can be a function of the system directivity, or Q, and to that extent the term “throw” and the system Q are related but not identical. Two loudspeaker systems, both with the same Q will only have the same “throw” if the on axis 1 watt at 1 meter sensitivity and power handling are also identical. Additionally, a loudspeaker system with a lower Q but higher 1 watt at 1 meter sensitivity and higher power handling will actually “throw” farther then the “high Q” system!)

In addition to the loudspeaker performance parameters the desired SPL at a specific distance is required to properly answer the question and in reality, what is really being asked is “How loud can I get the system at some distance”?

An example may help here:

**Customer Question One**: “How far will the One Systems 212CIM throw”?

***Engineer Answer (with a question unfortunately):*** “What SPL do you require”?

The reason the second question is asked is to determine the performance requirements for the venue.

***Customer Answer:*** “This is a softball field and we have measured A weighted crowd sound pressure levels at 90dB and that crowd is 75 feet from the location of the loudspeaker mounting position”.

***Engineer Answer**:* ”Great, the One Systems 212CIM is rated at 1 watt at 1 meter to produce a sound pressure level of 99dB. So, 75 feet is 22.8 meters, and that means that at 1 watt of input the SPL will be reduced by 27.1dB. (Spherical spreading loss only i.e., a 6dB loss for every doubling of distance, and no atmospheric losses are assumed at this distance, although there will be some based on actual wind and humidity conditions!)

Now, if we take the 1 watt at 1 meter level of 99dB and reduce it by the distance of 75 feet we see that the 212CIM will produce a sound pressure level of 71.8dB with a one watt input.

The customer has specified the crowd level of 90dBA (this is very loud!) and since we would like to have 3dB or more level above the crowd in order to make our announcement or music or other program material intelligible we calculate that we will need approximately 93dB of SPL. This will require a power input to the loudspeaker system of 132 watts.

So, the 212CIM will “throw” 75 feet, but we only know this because we know what SPL we need to achieve at this distance! (Without knowing the necessary SPL we have no way of answering the question!)

**Customer Question Number 2:** “But, we also have a baseball field where we have to mount the speaker on the score board in center field and we need to have good intelligibility at the back of the stands behind home plate, so, will the 212CIM “throw” 450 feet?…will that work too”?

***Engineer Answer Number 2***: “Will the crowd be talking at normal speech levels or screaming”?

***Customer Answer***: “What’s the difference”?

***Engineer Answer***: “Well, let’s see…assuming spherical spreading only (6dB loss for every doubling of distance) the SPL at 450 (137 meters) feet will be reduced by almost 43dB (42.7dB to be exact), so the SPL at 1 watt of power input to the 212CIM will be only 56.3dB!

So, let’s add some power and see what happens. If we are trying to get 3dB above average speech levels, we will need about 63dB since normal “talking” is about 60dB. That means we would need 4.7 watts of power…no problem, the 212CIM will “throw” 450 feet without any issues”!

***Customer Answer***: “But you silly engineer, this is a sporting event, we need to get louder than that”!

**Engineer Response**: “OK, let’s see what we can do at 85dB SPL…we need 741 watts. This can be done, but we’re getting up fairly high in power levels, but OK, make sure you have an amplifier with plenty of power, so we have good head room!

Now, if you only need 82dB (still fairly loud), we only need 370 watts…easy to do.

But, if you need 88dB you will need 1482 watts…NOT recommended and you should use the One Systems Cross Field Array”!

**SUMMARY:**

Based on the examples above the One Systems 212CIM will throw 450 feet, no problem, or maybe a problem, or not at all…

IT ALL DEPENDS ON WHAT SPL YOU REQUIRE AT A SPECIFIED DISTANCE AND WHAT POWER LEVEL IS AVAILABLE AND SAFE FOR THE SYSTEM!

The calculations above apply to ALL manufacturers and to ALL speaker systems.

Do some loudspeakers throw farther than others? Of course they do and it's easy to compare the two speakers based solely on the system 1 watt at 1 meter sensitivity AND system power handling.

However, asking "how far will the 212CIM throw" (or ANY speaker from ANY manufacturer), can only be answered by asking more about the acoustic requirements of the system, then running calculations based on those requirements and the loudspeaker system's sensitivity.

When a manufacturer specifies a "throw" distance for a loudspeaker system without asking what the required SPL is they are providing incorrect information. It is unfortunate that the term "throw" exists at all, as it frequently leads to system installations where inappropriate loudspeaker systems are specified for the acoustic space.

A far better question is: "What SPL can I achieve at "X" distance with this system and at what input power level"?

.

ONE SYSTEMS®

April 5, 2010

# OPTIMIZING SYSTEM PERFORMANCE WITH THE 112IM SUB

The One Systems 112IM Sub is a 12-inch (305 mm) subwoofer / bass module designed to augment the low-end response of a variety of other One Systems full-range enclosures. The 112IM Sub may be used with the 112IM, 212CIM, 108IM, 208CIM, 106IM and 103IM systems.

There are two basic configurations that can be used: The 112IM Sub may be set up in a “classic” subwoofer mode or in a mode that can essentially double the acoustic output from 50 Hz to the upper overlap frequency of between 80 Hz and 120 Hz. This second mode, known as “overlap” mode, is an ideal way to maximize low-frequency output and also improve very low-frequency polar control. The overlap mode is most suited for use with the 112IM and 212CIM enclosures and should not be used with other One Systems enclosures. The 108IM, 208CIM, 106IM or 103IM should be used with the 112IM Sub in “classic” subwoofer mode only, not in “overlap” mode.

Recommended processor settings are shown below for both the “classic” subwoofer mode and “overlap” mode. Both modes require use of a DSP (Digital Signal Processor) based crossover and two amplifier channels. An analog crossover may be used for the “classic” subwoofer mode in place of the DSP based crossover, but only a DSP-based crossover/processor may be used for the “overlap” mode.

## SUBWOOFER MODE

### Crossover Settings

### Low-Frequency (112IM Sub) Output

The low frequency output from the crossover/processor should have a high-pass filter set to 45Hz and be a 4$^{th}$ order (24 dB/octave) Butterworth alignment. There should also be a low-pass filter set to between 80 Hz and 120 Hz. This low pass filter should be a Linkwitz-Riley alignment and be a 4$^{th}$ order filter. (NOTE: The low pass filter corner frequency of 80 Hz to 120 Hz is user-settable. This frequency may be adjusted based on user sonic preferences.)

 

**High-Frequency Output (output above 80 Hz to 120 Hz)**

The high-frequency output from the crossover/processor should have a high-pass filter set to be the same frequency as the frequency of the low-pass filter of the low-frequency output of the processor. (i.e., if the low-pass output of the low-frequency channel is 80 Hz, then the high-pass frequency of the high frequency channel should also be set to 80 Hz)

This high-pass filter should be a 4th order (24 dB/octave) Linkwitz-Riley alignment.

**Summary**

*112IM Sub Channel*

| Filter Type | Frequency | Filter Alignment |
|---|---|---|
| High-Pass Filter | 45 Hz | 4th order Butterworth |
| Low-Pass Filter | 80 Hz to 120 Hz | 4th order Linkwitz-Riley |

112IM Sub Channel Gain may be set to sonic requirements

*High-Frequency Channel* (output above 80 Hz to 120 Hz)

| Filter Type | Frequency | Filter Alignment |
|---|---|---|
| High-Pass Filter | 80 Hz to 120 Hz * | 4th order Linkwitz-Riley |

*Note: The high-pass filter in the high-frequency channel must have the same corner frequency as the low-pass filter in the 112IM Sub channel

**Parametric Filter Settings**

Low-frequency channel parametric equalization may be used as follows: (2 parametric EQ's are recommended)

1. PEQ Frequency 60 Hz
   PEQ Gain 4 dB
   PEQ Bandwidth 0.3 Octave

2. PEQ Frequency 80 Hz
   PEQ Gain 2.5 dB
   PEQ Bandwidth 0.3 Octave

The overall gain of the low-frequency processor channel should be set to the user's sonic preference.

Any parametric equalization on the high-frequency output should be based on the specific recommendations of the enclosure type used. However, any EQ recommendations with center frequencies below the high-pass filter frequency should be set to 0 dB (i.e., not used). This document may be found on the One Systems web site:

http://onesystems.com/technical-papers.php

The technical paper is found in the Documentation section/ Technical Papers/ "Equalization and Filter Recommendations"

## OVERLAP MODE

As noted above, the "overlap" mode utilizes both the 112IM Sub output and the output of the main enclosure in parallel in the low-frequency range. This mode is very effective when both lower frequency extension and increased level are required at low frequencies.

### Crossover Settings

The low-frequency output from the crossover/processor should have a high-pass filter set to 45 Hz and be a 4$^{th}$ order (24 dB/octave) Butterworth alignment. There should also be a low-pass filter set to between 80 Hz and 120 Hz. This low-pass filter should be a Linkwitz-Riley alignment and be a 4$^{th}$ order filter. (Note: The low-pass filter corner frequency of 80 Hz to 120 Hz is user settable. This frequency may be set based on user sonic preferences.)

The second channel of the processor is now a full-range output. The crossover/processor should have a high-pass filter set to 45 Hz and be a 4$^{th}$ order (24 dB/octave) Butterworth alignment. Note that both the 112IM Sub and the main full-range enclosure are operating in parallel acoustically between 45 Hz and the low-pass filter frequency setting of the low-frequency output channel of the processor.

### Summary

### Low-Frequency (112IM Sub) Output

*112IM Sub Channel*

| Filter Type | Frequency | Filter Alignment |
|---|---|---|
| High-Pass Filter | 45 Hz | 4$^{th}$ order Butterworth |
| Low-Pass Filter | 80 Hz to 120 Hz | 4$^{th}$ order Linkwitz-Riley |

**Full-Range Output**

*High-Frequency Channel*

| Filter Type | Frequency | Filter Alignment |
|---|---|---|
| High-Pass Filter | 45 Hz | 4th order Butterworth |

Full Range Channel Delay. See important note below for necessary delay settings for the full range channel.

**IMPORTANT NOTE**

In the "overlap" mode, the acoustic summing of the low-frequency section (low-frequency DSP output) and the full-range section (the second DSP output) will require delay applied to the full-range output. The specific amount of delay required will be based not only on the group delay associated with the low-pass filter of the low-frequency channel, but also based on the physical location of the 112IM Sub relative to the full-range enclosure. This delay will substantially improve the summing of the two woofers and produce superior low-frequency output.

The recommended initial delay on the full-range (second DSP channel) should be approximately 5 mSec to 6 mSec. This value can then be varied to achieve the best low-frequency summing between the two enclosures. In general, the lower the frequency of the low-pass filter in the 112IM Sub channel, the larger the required time delay on the full-range channel. (Approximately 6 mSec for an 80 Hz low-pass filter frequency on the 112IM Sub channel to 5 mSec for a 120 Hz low-pass filter frequency on the 112IM Sub channel. Just remember not to get confused, the delay should be applied to the full range channel, not the 112IM Sub channel!)

This delay value may also require additional "tuning" based on the relative physical location of the two enclosures, and will require some user experimentation if the two enclosures are physically separated.

**Parametric Filter Settings**

Low-frequency channel parametric equalization may be used as follows: (2 parametric EQ's are recommended). This equalization should be applied to both the 112IM Sub's channel AND the full-range channel. It is recommended that any low-frequency equalization be the SAME for both the 112IM Sub's channel and the full-range channel. The values listed below may be adjusted to suit sonic requirements but, as always, care should be exercised when boosting to insure adequate amplifier headroom is maintained.

1. PEQ Frequency 60 Hz
   PEQ Gain 4 dB
   PEQ Bandwidth 0.3 Octave

2. PEQ Frequency 80 Hz
   PEQ Gain 2.5 dB
   PEQ Bandwidth 0.3 Octave

The overall gain of the low-frequency processor channel should be set to the user's sonic preference.

Any parametric equalization on the full-range output should be based on the specific recommendations of the enclosure type used. However, any EQ recommendations with center frequencies below the high-pass filter frequency should be set to 0 dB (i.e., not used). This document may be found on the One Systems web site:

http://onesystems.com/technical-papers.php

The technical paper is found in the Documentation section/ Technical Papers/ "Equalization and Filter Recommendations"

ONE SYSTEMS®

# OUTDOOR INSTALLATION OF LOUDSPEAKERS

ONE SYSTEMS® products are designed to be used in direct weather outdoor environments. Even with all of the substantial weather protection built into ONE SYSTEMS products it is still advisable to observe some basic and fundamental “rules” when installing loudspeakers outdoors.

If an option exists to provide shelter or an “overhang”, such as a roof eave it is always preferable to mount in that protected environment.

If the loudspeaker is mounted in a direct exposure, it is recommended that the loudspeaker be tilted down to minimize direct rain on the acoustically transparent grille assembly. This mild amount of tilt, 3 degrees to 5 degrees, will provide additional direct weather protection. Of course if the installation requires more down tilt to achieve a desired acoustic coverage the protection will be further improved.

This down tilt is particularly important in areas where ice and snow are expected. The down tilt will minimize the build up of ice on the grille.

ONE SYSTEMS enclosures are rated to IEC529 IP45. This rating implies that the enclosure is dust protected against all solid objects larger than 1mm (0.4 in) and protected against water jets from any direction. (The IP rating for the second digit of “5” rates the enclosure for water jets. The next step in the IP rating would be a “6” which implies “powerful” water jets. This distinction between “water jets” and “powerful water jets” is important and suggests that care should still be exercised when locating ONE SYSTEMS loudspeaker systems in extremely harsh environments where “powerful water jets” will be present)

In all cases when loudspeakers are installed outdoors, the supplied IPON connector, weather cover and gasket should be used.

It is advisable to insure good seals between all rigging hardware and the enclosure. In extreme situations RTV silicone may be applied at the interface between the rigging bolts and the enclosure.

All internal and external hardware on ONE SYSTEMS enclosures are either stainless steel or aluminum. All associated hardware (hardware not supplied by ONE SYSTEMS but used to suspend enclosures and rigging) should be stainless steel. The selection of associated rigging should be done by a professional that has experience suspending products and is familiar with local and national codes.

All cabling should be rated for direct weather exposure by the cable manufacturer.

Because outdoor environments present additional stress and potential long term structural compromises to all elements of the system (the enclosure and the associated rigging) regular inspections should be performed to verify adequate safety factors. These inspections should be performed yearly by a qualified professional with knowledge of local and national codes and requirements.

ONE SYSTEMS enclosures are molded using a resin specially formulated for outdoor exposure (molded enclosures) or painted both externally and internally to minimize moisture absorption (wood enclosures). Particularly with wood enclosures, any damage to the paint finish during installation should be repaired or sealed to prevent the possibility of moisture coming in direct contact with the bare wood surface.

ONE SYSTEMS®

**One Systems USA, Inc.** * 6204 Gardendale Dr. * Nashville, TN 37215
**One Systems Group Co. Ltd.** * European Division * Mittelsmoorer Strasse 12 * 28879 Grassberg German
**One Systems Global Co., Ltd**. * 87/114 Modern Town 15th Floor * Sukhumvit 63, Ekkamai Soi 3, Klongtoey, Bangkok, 1010 Thailand

# PAINTING ONE SYSTEMS® IM SERIES ENCLOSURES

One Systems® IM injection molded enclosures may be painted for custom color requirements. The enclosures are a modified polypropylene material that requires some special “attention” prior to painting, but several paint manufacturers offer specially formulated paint systems designed for use with polypropylene.

Regardless of the specific paint selected it is important that the surface be very clean and free of dirt, debris and other foreign material. The manufacturers’ directions should be followed exactly. It is also recommended that a face mask be worn during the painting process. Use only the cleaning agent recommended by each paint manufacturer.

Below are two manufacturers that One Systems has tested and recommends for use with its IM series products:

**Krylon® FUSION for Plastic**

This FUSION paint from Krylon is available in most hardware super stores and small hardware chains. The material is designed for good adhesion to many plastic substrates and works well on the IM series enclosures. The paint is available in 32 colors.

Krylon does NOT recommend that any top coat be sprayed over FUSION paint unless it is another coat of FUSION paint. (of any other available color or a second coat of the same color)

**Rust-Oleum® (Specialty Series) PLASTIC PRIMER**

This material from Rust-Oleum is a base primer and is available only in a white color. It is available in most hardware “super stores”. Like the Krylon material, the surface must be well cleaned prior to use and the manufacturer’s instructions should be followed.

After the plastic primer has dried, (follow instructions on the can) a top coat of any outdoor rated oil based enamel paint may be applied.

*Note: A top coat can only be applied after a minimum of 1 hour drying time.*

It is important to insure that the primer coat be applied in a thin layer.  Do not apply too thick of a base coat as the primer will run and produce an uneven finish. Thin coats also provide faster curing.

**One Systems USA, Inc.** * 6204 Gardendale Dr. * Nashville, TN 37215
**One Systems Group Co. Ltd.** * European Division * Mittelsmoorer Strasse 12 * 28879 Grassberg German
**One Systems Global Co., Ltd**. * 87/114 Modern Town 15th Floor * Sukhumvit 63, Ekkamai Soi 3, Klongtoey, Bangkok, 1010 Thailand

# POLE MOUNT SYSTEM-2 INSTALLATION GUIDE

## November 2009

The Pole Mount System-2 is an easy to install and flexible system designed to allow ONE SYSTEMS loudspeaker products to be mounted to pole structures. The only products approved for use with the Pole Mount System-2 are the 112IM and 212CIM.

NOTE: The 112UM and 115UM are compatible with the Pole Mount System-2 if a user supplied stainless steel wire rope assembly is substituted for the Link assembly. The wire rope diameter should be 3/32 inch (2.5mm) or larger.

NO OTHER LOUDSPEAKERS SHOULD BE SUBSTITUTED!

The following actions MUST be performed PRIOR to beginning the installation of the Pole Mount System-2:

1. This installation guide must be completely read and understood

2. The instruction manual "Rigging and Suspension of ONE SYSTEMS Products" must be read and understood. (This instruction manual is available at www.ONESYSTEMS.com in the "Education section of the web site.

3. The manufacturer of the pole MUST be consulted to verify the applicability of the Pole Mount System-2 and ONE SYSTEMS loudspeaker to the specific pole

4. The Pole Mount System-2 and loudspeaker should be installed only by one experienced in the overhead suspension of items and familiar with the applicable local and national codes governing installation of these products and also governing the attachment of these products to the specific pole structure.

CAUTION: All structures outdoors are subjected to wind forces. These forces must be considered when suspending any product outdoors. It is necessary to know the "Effective Projected Area" (EPA) of the loudspeaker prior to installation of the loudspeaker and Pole Mount System-2. This data must be supplied to the pole manufacturer in order to determine safe operation conditions for the loudspeaker and Pole Mount System-2 when mounted to a specific pole. See Appendix 1 of this installation manual for effective projected areas for each enclosure rated for use with the Pole Mount System-2.

.

# INSTALLATION

The Pole Mount System-2 consists of three parts: the pole bracket, the loudspeaker bracket, and the Link. The bracket is designed for pole diameters of a minimum of 8 inches (203.2mm). Pole diameters smaller than 8 inches must not be used.

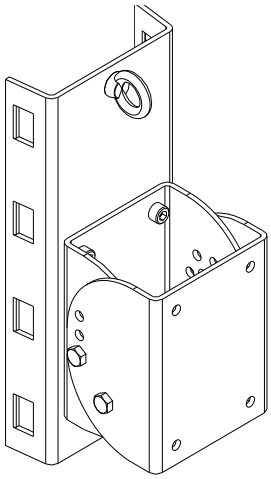

Figure 1

Figure 1 represents the isometric and top views of the pole bracket, including the loudspeaker bracket section. The loudspeaker bracket is shown separately in Figure 2.

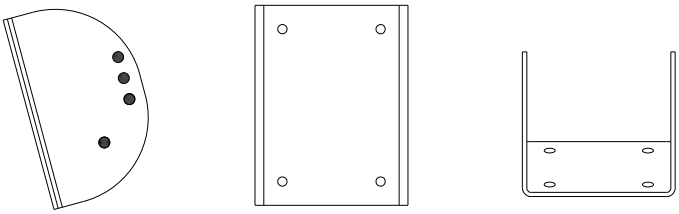

Figure 2

NOTE: The loudspeaker bracket should be removed from the main bracket section prior to mounting the pole bracket to the pole.

Figure 3 is a representation of the Link assembly. This assembly MUST be used whenever the Pole Mount System-2 is being used.

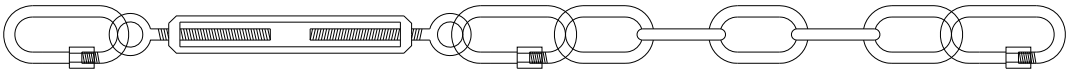

Figure 3

1. Mount the pole mount section (see Figure 1) of the bracket to the pole at the desired height on the pole. The loudspeaker bracket shown in Figure 2 should be removed prior to hanging the pole mount section. The bracket is mounted to the pole using BAND-IT stainless steel bands. DO NOT SUSTITUTE bands of other material or other widths! There are FOUR (4) locations on the pole bracket for bands. ALL FOUR LOCATIONS MUST BE USED. Figure 4 illustrates the locations for the stainless steel band clamps.

IMPORTANT: It is REQUIRED that each of the four bands be DOUBLE wrapped. Double wrapping will insure a strong and secure mounting of the bracket to the pole. The stainless steel banding materials should be as follows:

| | |
|---|---|
| BAND-IT | # C206R9 stainless steel bands |
| BAND-IT | # C25699 buckles |
| BAND-IT | # C00169 tensioning tool |

The stainless steel band is Type 201SS 0.030 inches (0.762mm) thick and 0.750 inches (19mm) wide.

WARNING: Do NOT substitute banding materials or banding dimensions.

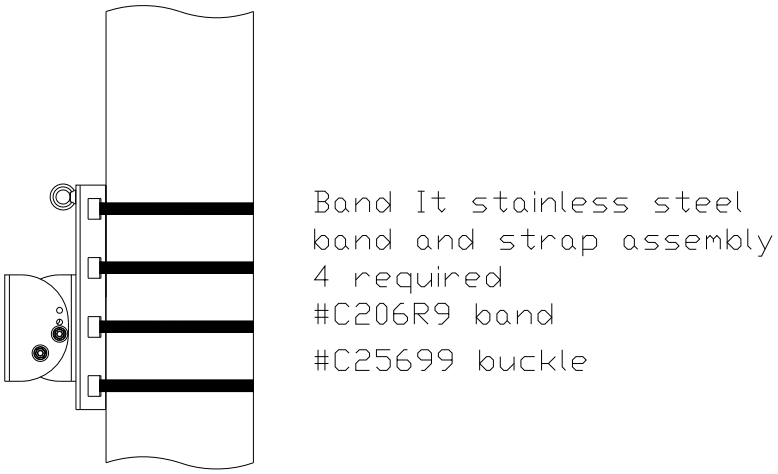


Figure 4

Installation instructions from BAND-IT should be followed exactly. Operating instructions are supplied with the tensioning tool. (All BAND-IT parts and tools purchased separately. These parts and tools are not supplied by ONE SYSTEMS).

The stainless steel banding material, buckles, and tensioning tools are available from the following locations (or though distributors recommended by these locations):

BAND-IT IDEX, Inc.
4799 Dahlia St.
Denver Colorado 80216
USA
1-800-525-0758

P&C Industrial Supplies
(A U.S.A. BAND-IT Distributor in Michigan)
1-800922-9291

FELIX PONCE
Calle Ignacio Zaragonza No. 8
Colonia Ahuehuetes Atizapan 52953
Edo. de Mexico
(52) 555825 8502

BAND-IT Company Limited
Speedwell Industrial Estate
Stavely, Nr. Chesterfield
Derbyshire, S43 3PF England
Home Sales (44) 1246-479479
Export Sales (44) 1246 479480

BAND-IT Clamps (ASIA) Pte. Ltd.
11 Second Chin Bee Road
Singapore 618777
65-62658853

BAND-IT Shanghai Sales Office
207 room
Wanbao International Business Centre
660# Xinhua Road
Shanghai, China 200052
021-62826348-308

2. Next, the loudspeaker bracket should be mounted to the loudspeaker (ONE SYSTEMS 112IM, 212CIM, 112UM or 115UM only) using the supplied M10 stainless steel bolts and internal tooth lock washers. DO NOT SUBSTITUE ANY PARTS

NOTE: There are 8 each hex head M10 bolts supplied in the mounting kit of the Pole Mount System-2. When mounting the 115TW, 112UM and 115UM (wood) enclosures to the Pole Mount System-2 use 4 each of the 45mm (longer) M10 bolts. The 4 shorter M10 bolts are used for the IM series injection molded enclosures.

3. Now the M10 forged shoulder “eye” bolt should be installed in the top rear of the loudspeaker enclosure.

NOTE: There two (2) forged shoulder eye bolts included. One has a 17mm threaded section and the second has a 40mm threaded section. Use the 17mm threaded section eye bolt for the

112IM and 212CIM enclosures. Use the 40mm threaded section eye bolt for the 112UM and 115UM wood enclosure.

The shoulder of the eye bolt MUST be flush and in contact with the surface of the enclosure.

4. The loudspeaker may now be placed on the pole bracket (see figure 2).

USE EXTREME CAUTION! The loudspeaker is heavy and it is likely that the desired mounting location is high in the air. This process should never be attempted by a single person.

TWO PEOPLE ARE REQUIRED TO MOUNT THE LOUDSPEAKER ENCLOSURE TO THE POLE AND POLE MOUNT ASSEMBLY! (Safety harnesses should always be worn when working from an elevated platform)

First insert the M10 bolt into the pivot point and secure but do not fully tighten using the supplied M10 nylon insert nut.

Now the enclosure may be set at its desired down tilt using the second M10 bolt (“Tilt” bolt). The Pole Mount System-2 allows the loudspeaker to be oriented from a 0 degree down tilt to a maximum down tilt of 35 degrees. Now both M10 bolts should be tightened.

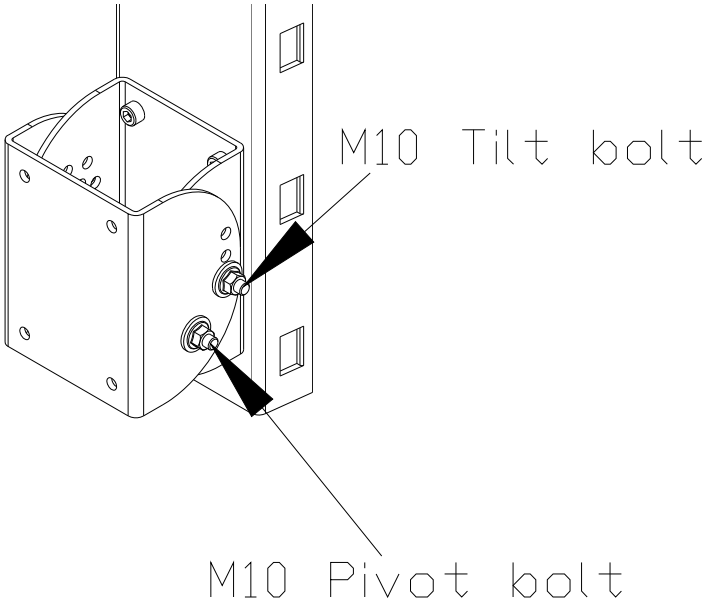


UNDER NO CIRCUMSTANCES SHOULD THE LOUDSPEAKER DOWN TILT EXCEED 35 DEGREES FROM VERTICAL!

5. Now the Link must be installed.

INSTALLING THE POLE MOUNT SYSTEM-2 WITHOUT THE LINK IS NOT ALLOWED!

The Link (see figure 3) consists of stainless steel quick links, a stainless steel turnbuckle, and several links of stainless steel chain.

DO NOT SUBSTITUTE ANY PART OF THIS LINK ASSEMBLY!

The Link should be tightened by rotating the turnbuckle until there is tension on the Link assembly. Do not over tighten. The purpose of the Link is to provide support for the main Pole Mount System-2 tilting bracket at the bottom of the assembly.

Make sure to use the appropriate combination of Link parts to insure proper connection between the Pole Mount System-2 and the specific One Systems enclosure. The required combination of Link parts is determined by the down tilt angle of the enclosure, but the turnbuckle must always be used.

The assembly may be configured with any combination of turnbuckle, chain link sections and quick link in order to achieve the proper tension on the system.

Warning, if the turnbuckle assembly is turned and the loudspeaker enclosure angle begins to change (if the down tilt angle begins to move toward 0 degrees vertical then the turnbuckle has been OVER TIGHTENED. Turn the turnbuckle until the down tilt angle is set by the M10 thru bolt on the pole bracket.

Figure 5 shows the loudspeaker assembly and Link in a 0 degrees vertical orientation.

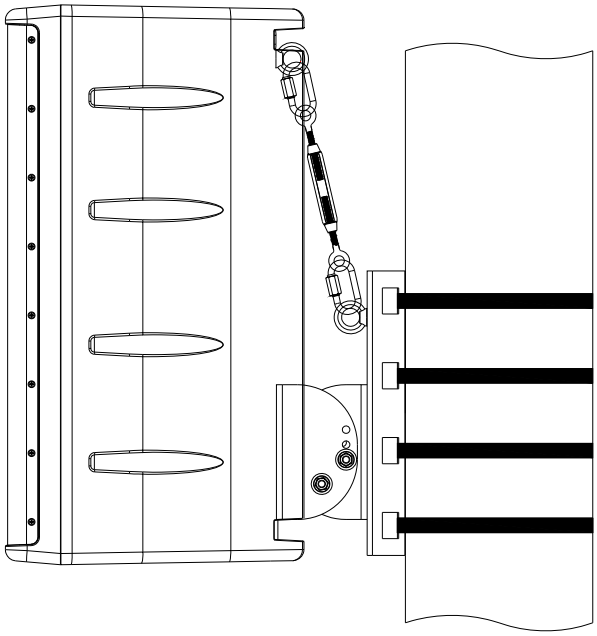

Figure 5

Angles other than 0 degrees from vertical require the turnbuckle to be adjusted. Certain enclosures may also require the addition of the chain depending on the distance between the two eyebolts.

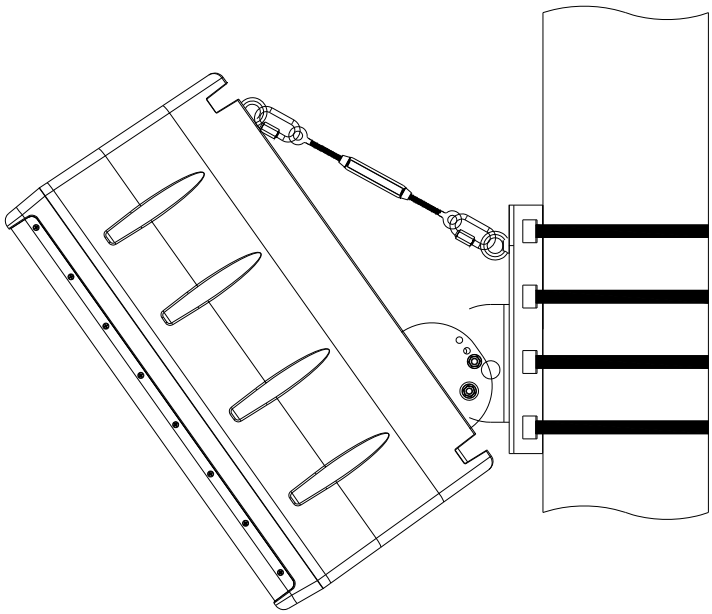

Figure 6

Figure 6 represents the maximum down tilt angle of 35 degrees from vertical.

In any position, the turnbuckle must be adjusted to allow the proper amount of tension on the Link. The link should never pull the loudspeaker up towards vertical.

Secondary safety cables are STRONGLY recommended and should be secured to a structural point NOT associated with the PT bracket or loudspeaker.

# APPENDIX 1

## Projected Area Values

The values below should be supplied to the specific pole manufacturer for safety calculations. These values were determined by adding the projected areas of the high frequency horns, the woofer cones and ports to the cross sectional area of the front of each enclosure listed below.

112IM …… 600 in^2 (387,096 mm^2)

212CIM…… 600 in^2 (387,096mm^2)

112UM.....…… 430 in^2 (276,480mm^2)

115UM…….. 571 in^2 (368,220mm^2)

# POLE MOUNT SYSTEM EX-2 INSTALLATION GUIDE

**November 2009**

The Pole Mount System EX-2 is an easy to install and flexible system designed to allow ONE SYSTEMS loudspeaker systems to be mounted to pole structures. The only products approved for use with the Pole Mount System EX-2 are the 212IM, 312CIM, 115TW and the Cross Field Array (CFA).

NO OTHER LOUDSPEAKERS SHOULD BE SUBSTITUTED!

The following actions MUST be performed PRIOR to beginning the installation of the Pole Mount System EX-2:

1. This installation guide must be completely read and understood

2. The instruction manual "Rigging and Suspension of ONE SYSTEMS Products" must be read and understood. (This instruction manual is available at www.ONESYSTEMS.com in the "Education section of the web site.

3. The manufacturer of the pole MUST be consulted to verify the applicability of the Pole Mount System EX-2 and ONE SYSTEMS loudspeaker to the specific pole

4. The Pole Mount System EX-2 loudspeaker should be installed only by one experienced in the overhead suspension of items and familiar with the applicable local and national codes governing installation of these products and also governing the attachment of these products to the specific pole structure.

CAUTION: All structures outdoors are subjected to wind forces. These forces must be considered when suspending any product outdoors. It is necessary to know the "Effective Projected Area" (EPA) of the loudspeaker prior to installation of the loudspeaker and Pole Mount System EX-2. This data must be supplied to the pole manufacturer in order to determine safe operation conditions for the loudspeaker and Pole Mount System EX-2 when mounted to a specific pole. See Appendix 1 of this installation manual for effective projected areas for each enclosure rated for use with the Pole Mount System EX-2.

# INSTALLATION

The Pole Mount System EX-2 consists of three parts: the pole bracket, the loudspeaker bracket, and the Link. The bracket is designed for pole diameters of a minimum of 8 inches (203.2mm). Pole diameters smaller than 8 inches must not be used.

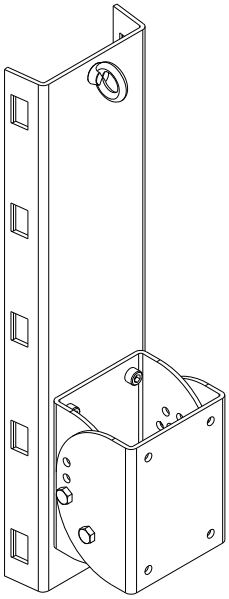

Figure 1

Figure 1 represents the isometric and top views of the pole bracket, including the loudspeaker bracket section.

The loudspeaker bracket is shown separately in Figure 2.

NOTE: The loudspeaker bracket should be removed from the main bracket section prior to mounting the pole bracket to the pole.

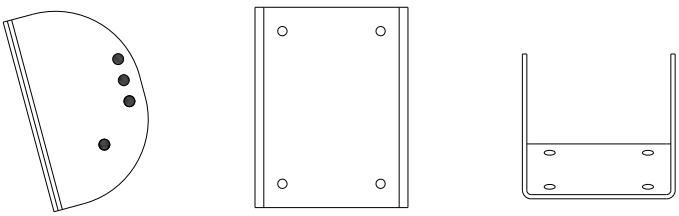

Figure 2

Figure 3 is a representation of the Link assembly. This assembly MUST be used whenever the Pole Mount System EX-2 is being used.

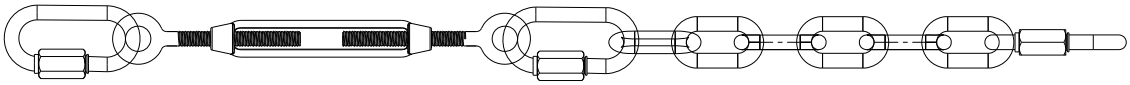

Figure 3

1. Mount the pole mount section (see figure 1) of the bracket to the pole at the desired height on the pole. The loudspeaker bracket shown in Figure 2 should be removed prior to hanging the pole mount section. The bracket is mounted to the pole using BAND-IT stainless steel bands. DO NOT SUSTITUTE bands of other material or other widths! There are FIVE locations on the pole bracket for bands. ALL FIVE LOCATIONS MUST BE USED. Figure 4 illustrates the locations for the stainless steel band clamps.

IMPORTANT: It is REQUIRED that each of the five bands be DOUBLE wrapped. Double wrapping will insure a strong and secure mounting of the bracket to the pole. The stainless steel banding materials should be as follows:

| | |
|---|---|
| BAND-IT | # C206R9 stainless steel bands |
| BAND-IT | # C25699 buckles |
| BAND-IT | # C00169 tensioning tool |

The stainless steel band is Type 201SS 0.030 inches (0.762mm) thick and 0.750 inches (19mm) wide.

WARNING: Do NOT substitute banding materials or banding dimensions.

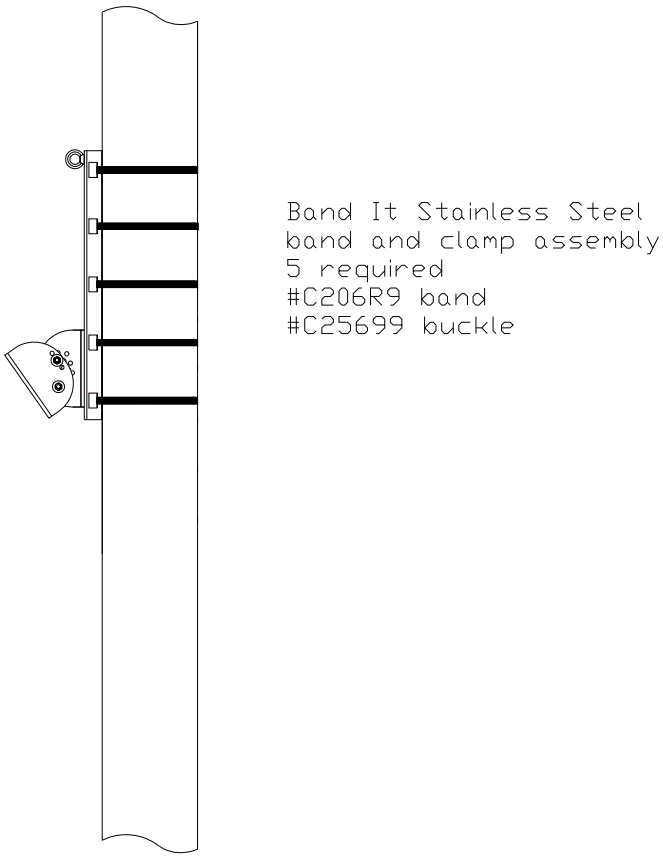


Figure 4

Installation instructions from BAND-IT should be followed exactly. Operating instructions are supplied with the tensioning tool. (All BAND-IT parts and tools purchased separately. These parts and tools are not supplied by ONE SYSTEMS).

The stainless steel banding material, buckles, and tensioning tools are available from the following locations (or though distributors recommended by these locations):

BAND-IT IDEX, Inc.
4799 Dahlia St.
Denver Colorado 80216
USA
1-800-525-0758

P&C Industrial Supplies
(U.S.A. Distributor of BAND-IT in Michigan)

FELIX PONCE
Calle Ignacio Zaragonza No. 8
Colonia Ahuehuetes Atizapan 52953
Edo. de Mexico
(52) 555825 8502

BAND-IT Company Limited
Speedwell Industrial Estate
Stavely, Nr. Chesterfield
Derbyshire, S43 3PF England
Home Sales (44) 1246-479479
Export Sales (44) 1246 479480

BAND-IT Clamps (ASIA) Pte. Ltd.
11 Second Chin Bee Road
Singapore 618777
65-62658853

BAND-IT Shanghai Sales Office
207 room
Wanbao International Business Centre
660# Xinhua Road
Shanghai, China 200052
021-62826348-308

2. Next, the loudspeaker bracket should be mounted to the loudspeaker (ONE SYSTEMS 212IM, 312CIM or Cross Field Array only) using the supplied M10 stainless steel bolts and internal tooth lock washers. DO NOT SUBSTITUE ANY PARTS

NOTE: There are 8 each hex head M10 bolts supplied in the mounting kit of the Pole Mount System EX-2. When mounting the 115TW (wood) enclosures to the Pole Mount System EX-2 use 4 each of the 45mm (longer) M10 bolts. The 4 shorter M10 bolts are used for the IM series injection molded enclosures and the Cross Field Array (CFA).

3. Now the M10 forged shoulder “eye” bolt should be installed in the top rear of the loudspeaker enclosure.

NOTE: There two (2) forged shoulder eye bolts included. One has a 17mm threaded section and the second has a 40mm threaded section. Use the 17mm threaded section eye bolt for the 212IM and 312CIM as well as the CFA enclosures. Use the 40mm threaded section eye bolt for the 115TW wood enclosure.

4. The loudspeaker may now be placed on the pole bracket (see figure 2).

USE EXTREME CAUTION! The loudspeaker is heavy and it is likely that the desired mounting location is high in the air. This process should never be attempted by a single person.

TWO PEOPLE ARE REQUIRED TO MOUNT THE LOUDSPEAKER ENCLOSURE TO THE POLE AND POLE MOUNT SYSTEM EX-2! (Safety harnesses should always be worn when working from an elevated platform)

First insert the M10 bolt into the pivot point and secure but do not fully tighten using the supplied M10 nylon insert nut.Now the enclosure may be set at its desired down tilt using the second M10 bolt (“Tilt” bolt). The Pole Mount System EX-2 allows the loudspeaker to be oriented from a

0 degree down tilt to a maximum down tilt of 35 degrees. Now both M10 bolts should be tightened

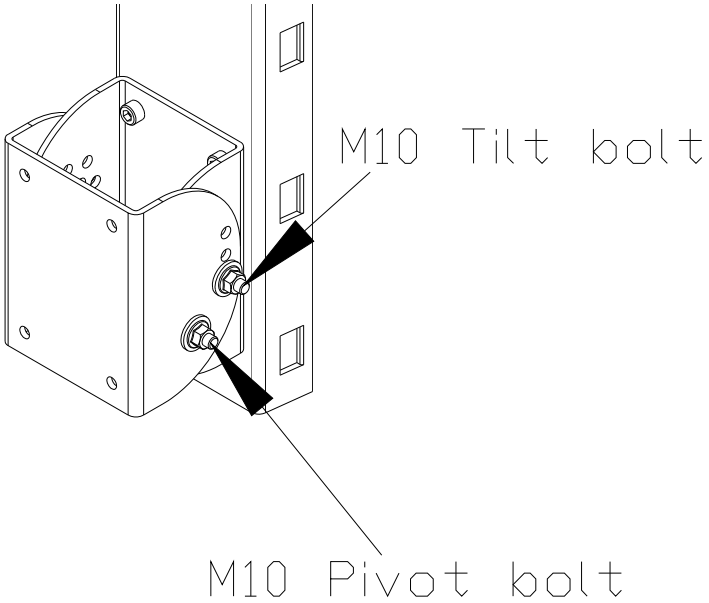


UNDER NO CIRCUMSTANCES SHOULD THE LOUDSPEAKER DOWN TILT EXCEED 35 DEGREES FROM VERTICAL!

5. Now the Link must be installed.

INSTALLING THE POLE MOUNT SYSTEM EX-2 WITHOUT THE LINK IS NOT ALLOWED!

The Link (see figure 3) consists of a stainless steel quick links, a stainless steel turnbuckle, and several links of stainless steel chain.

DO NOT SUBSTITUTE ANY PART OF THIS LINK ASSEMBLY!

The Link should be tightened by rotating the turnbuckle until there is tension on the Link assembly. Do not over tighten. The purpose of the Link is to provide support for the main Pole Mount System EX-2 tilting bracket at the bottom of the assembly.

Make sure to use the appropriate combination of Link parts to insure proper connection between the Pole Mount System EX-2 and the specific One Systems enclosure. The required combination of Link parts is determined by the down tilt angle of the enclosure, but the turnbuckle must always be used.

The assembly may be configured with any combination of turnbuckle, chain link sections and quick link in order to achieve the proper tension on the system. In certain situations only the turnbuckle will need to be used.

Warning, if the turnbuckle assembly is turned and the loudspeaker enclosure angle begins to change (if the down tilt angle begins to move toward 0 degrees vertical then the turnbuckle has been OVER TIGHTENED. Turn the turnbuckle until the down tilt angle is set by the M10 thru bolt on the pole bracket.

Figure 5 shows the loudspeaker assembly (212IM/312CIM) and Link in a 0 degrees vertical orientation. The assembly may be configured with any combination of turnbuckle, chain link sections and quick link in order to achieve the proper tension on the system. In the image below there is one turnbuckle (always required) and there are three quick links.

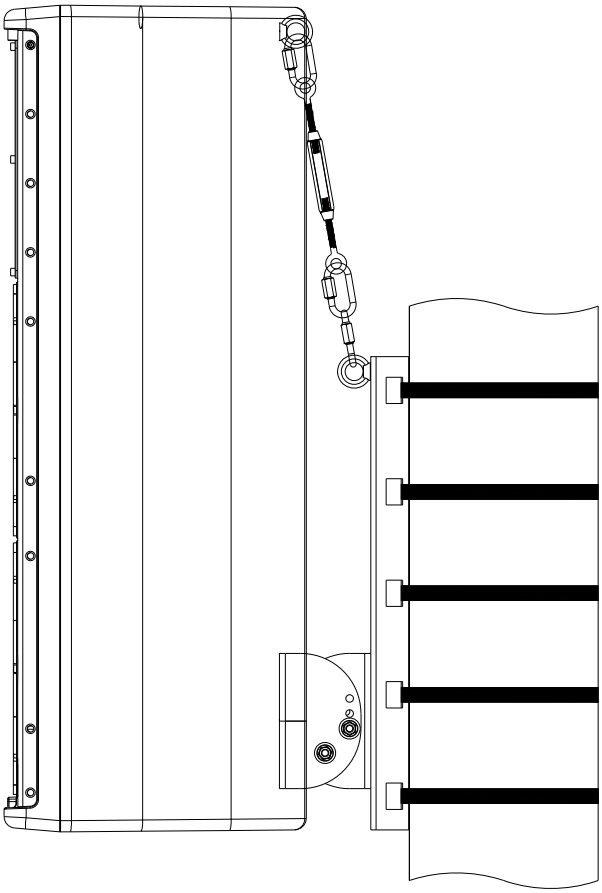

Figure 5

Angles other than 0 degrees from vertical require the stainless steel chain links to be inserted as shown in Figures 6 and 7.

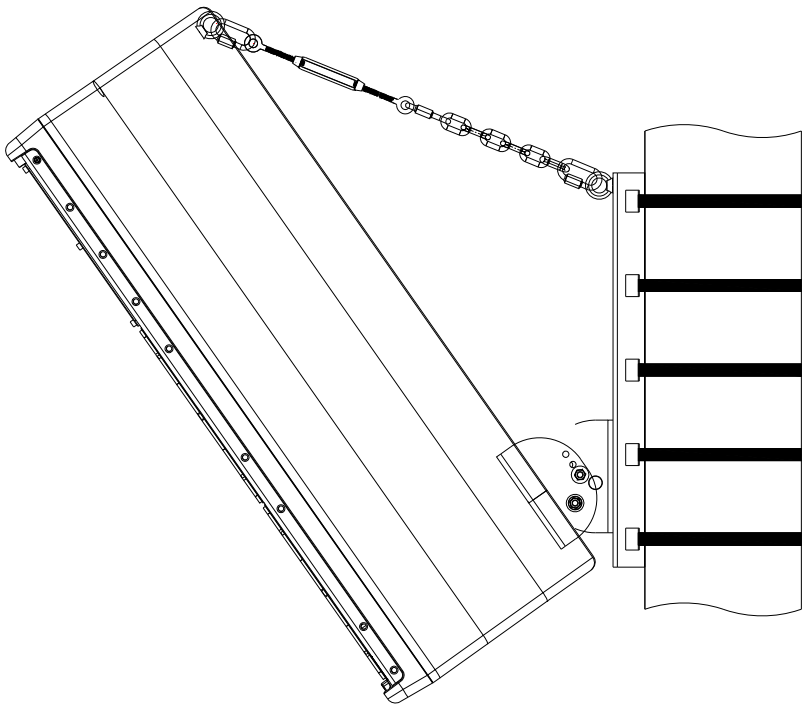

Figure 6

Figure 6 represents the maximum down tilt angle of 35 degrees from vertical and is shown with the chain section, three quick links and the turnbuckle.

Angles of less then 35 degrees may require that sections of the chain be dropped. This is shown in Figure 7. Note that one of the Links has been dropped to allow for an angle of less than the 35 degrees.

In any position, the turnbuckle must be adjusted to allow the proper amount of tension on the Link. The link should never pull the loudspeaker up towards vertical but should always have slight tension.

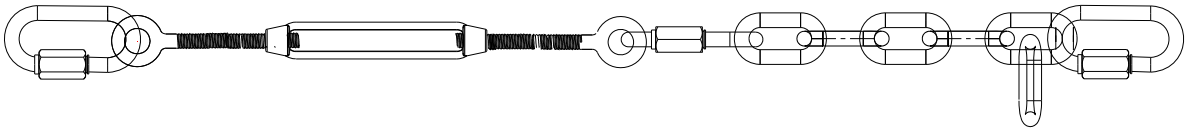

Figure 7

Secondary safety cables are STRONGLY recommended and should be secured to a structural point NOT associated with the PT bracket or loudspeaker.

# APPENDIX 1

## Projected Area Values

The values below should be supplied to the specific pole manufacturer for safety calculations. These values were determined by adding the projected areas of the high frequency horns, the woofer cones and ports to the cross sectional area of the front of each enclosure listed below.

212IM …… 804 in^2 (550,000 mm^2)

312CIM…… 804 in^2 (550,000mm^2)

Cross Field Array…… 2,708in^2 (1,750,000mm^2)

115TW…… 800in^2 (516,130mm^2)

# POLE MOUNT MINI INSTALLATION GUIDE

New - November 2009

## POLE MOUNT MINI INSTALLATION

WARNING: DO NOT attempt to mount multiple brackets side by side using the same stainless steel banding system. The stainless steel banding systems are designed for use with ONE bracket ONLY!

The Pole Mount Mini is an easy to install and flexible system designed to allow ONE SYSTEMS loudspeaker systems to be mounted to pole structures. The only products approved for use with the Pole Mount System are the 103IM and 106IM or transformer variants of the 103IM or 106IM.

NO OTHER LOUDSPEAKERS SHOULD BE SUBSTITUTED!

The following actions MUST be performed PRIOR to beginning the installation of the Pole Mount System:

1. This installation guide must be completely read and understood

2. The instruction manual “Rigging and Suspension of ONE SYSTEMS Products” must be read and understood. This instruction manual is available at www.ONESYSTEMS.com in the “Education” section of the web site.

3. The manufacturer of the pole MUST be consulted to verify the applicability of the Pole Mount Mini and ONE SYSTEMS loudspeaker to the specific pole.

4. The Pole Mount Mini and loudspeaker should be installed only by one experienced in the overhead suspension of items and familiar with the applicable local and national codes governing installation of these products and also governing the attachment of these products to the specific pole structure.

CAUTION: All structures outdoors are subjected to wind forces. These forces must be considered when suspending any product outdoors. It is necessary to know the “Effective Projected Area” (EPA) of the loudspeaker prior to installation of the loudspeaker and Pole Mount Mini. This data must be supplied to the pole manufacturer in order to determine safe operation conditions for the loudspeaker and Pole Mount Mini when mounted to a specific pole. See Appendix 1 of this installation manual for “Equivalent Projected Area (EPA) values for the 103IM and 106IM. These values may also be found on the ONE SYSTEMS web site at www.ONESYSTEMS.com.

# INSTALLATION

The Pole Mount Mini consists of two parts: the pole bracket assembly, and the forged shoulder eye bolts and supplied cable assembly. The pole bracket is shown in Figure 1. The bracket shown in figure 1 is designed for use on circular poles with diameters of 4 inches (101.6mm) or larger. The Pole Mount Mini may also be used on square or rectangular pole faces of 3.75 inches (92mm). Round pole diameters smaller than 4 inches or square/rectangular face widths of 3.75 must not be used.

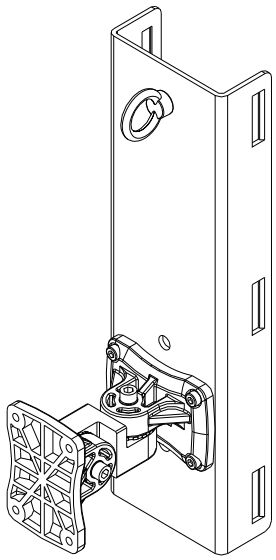

Figure 1

1. NOTE: It is best to preset the desired pan and tilt angles PRIOR to mounting the Pole Mount Mini on a pole. (Step 2 below offers details)

Mount the pole mount section (see figure 1) of the bracket to the pole at the desired height on the pole. The bracket is mounted to the pole using BAND-IT stainless steel bands. DO NOT SUSTITUTE bands of other material or other widths! There are three locations on the pole bracket for bands.

IMPORTANT: ALL THREE BAND LOCATIONS MUST BE USED.

Figure 2 illustrates the locations for the stainless steel band clamps.

IMPORTANT: It is REQUIRED that each of the three bands be double wrapped. Double wrapping will insure a strong and secure mounting of the bracket to the pole. The stainless steel banding materials should be as follows:

| | |
|---|---|
| BAND-IT | # C206R9 stainless steel bands |
| BAND-IT | # C25699 buckles |
| BAND-IT | # C00169 tensioning tool |

The stainless steel band is Type 201SS 0.030 inches (0.762mm) thick and 0.750 inches (19mm) wide.

WARNING: Do NOT substitute banding materials or banding dimensions.

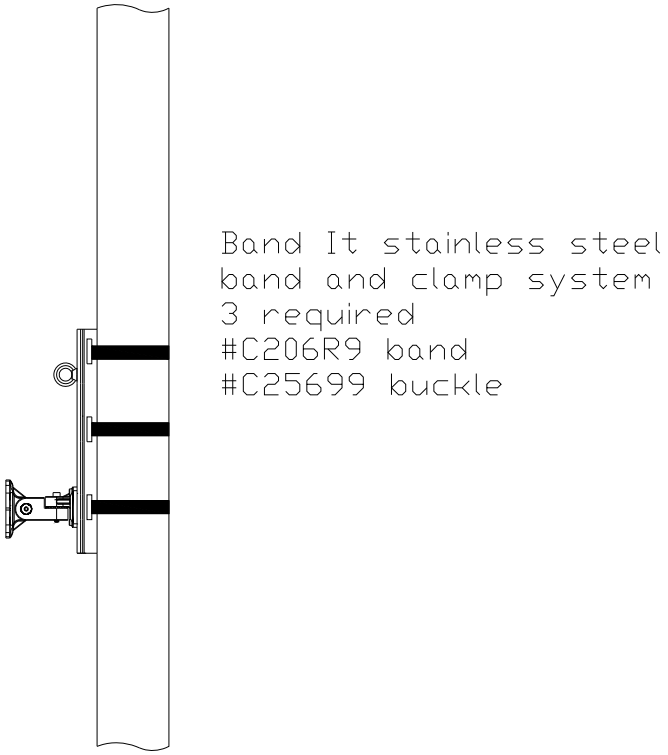


Figure 2

Installation instructions from BAND-IT should be followed exactly. Operating instructions are supplied with the tensioning tool. (All BAND-IT parts and tools purchased separately. These parts and tools are not supplied by ONE SYSTEMS).

The stainless steel banding material, buckles and tensioning tools are available from the following locations (or though distributors recommended by these locations):

BAND-IT IDEX, Inc.
4799 Dahlia St.
Denver Colorado 80216
USA
1-800-525-0758

FELIX PONCE
Calle Ignacio Zaragonza No. 8
Colonia Ahuehuetes Atizapan 52953
Edo. de Mexico
(52) 555825 8502

BAND-IT Company Limited
Speedwell Industrial Estate
Stavely, Nr. Chesterfield
Derbyshire, S43 3PF England
Home Sales (44) 1246-479479
Export Sales (44) 1246 479480

BAND-IT Clamps (ASIA) Pte. Ltd.
11 Second Chin Bee Road
Singapore 618777
65-62658853

BAND-IT Shanghai Sales Office
207 room
Wanbao International Business Centre
660# Xinhua Road
Shanghai, China 200052
021-62826348-308

2. Attach the appropriate eye bolt to the enclosure. The eye bolt is attached to the rear (top rear) of the 106IM. The eye bolt is attached to the top of the 103IM. There are two eye bolts supplied. One is an M8 eyebolt for use on the 106IM. The second eye bolt is an M5 and is for use on a 103IM. Use the eyebolt that mates with the specific loudspeaker being mounted to the Pole Mount Mini.

Next, the pan and tilt angles of the PT-10 bracket should be set.

The pan and tilt function allows pan and tilt angles in 10 degree increments.
Note: Two different center pieces are supplied for the PT-10 bracket that will accommodate 20 degree increments, with each center piece incremented by 10 degrees to allow for the 10 degree total pan and tilt adjustment. Select the proper center piece that provides the correct aiming angles. See the illustration below for details on the center piece of the PT-10.

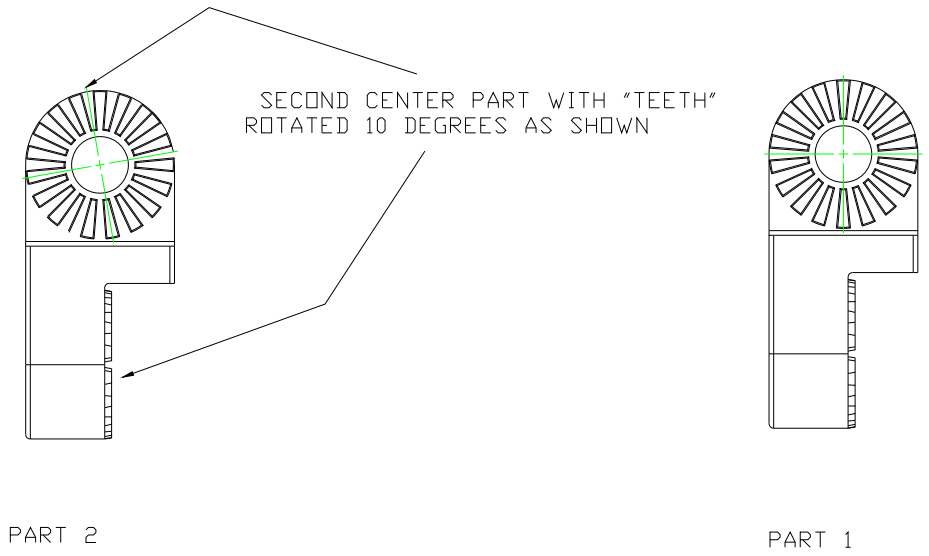


Now the loudspeaker (103IM or 106IM) should be mounted to the loudspeaker bracket (PT-10) using the supplied stainless steel bolts and washers (M5). It is recommended that the desired pan and tilt angles of the loudspeaker be set on the PT-10 portion of the assembly prior to mounting the loudspeaker.

The instructions for the PT-10 portion of the Pole Mount Mini are also included and should be referred to when setting the pan and tilt angles.

3. The Pole Mount Mini is supplied with a forged shoulder eye bolt. This bolt is designed to be used with a secondary cable assembly. This cable assembly must be configured AFTER the enclosure is mounted on the PT-10 portion of the Pole Mount Mini.

An M8 eye bolt is supplied to allow the 106IM enclosure to be fitted with the supplied cable assembly. An M5 eye bolt is supplied to allow the 103IM to be fitted with the supplied cable assembly.

INSTALLING THE POLE MOUNT SYSTEM WITHOUT THE CABLE ASSEMBLY IS NOT ALLOWED!

## NOTE: Review all remaining sections before configuring the cable assembly!

4. Configuration of the supplied cable parts (cable, thimbles and compression sleeves).

DO NOT PRE ASSEMBLE THE CABLE.

The cable assembly MUST be assembled AFTER the enclosure is mounted to the bracket and the bracket is suspended. See Figure 5 for detail of the finished assembly.

The cable assembly consists of a length of 1/16 inch stainless steel wire rope, two ¼ inch stainless steel thimbles, and two oval sleeves. The ¼ inch thimbles must be spread to fit over each of the eyebolts. The wire rope should be configured and the sleeves crimped AFTER the thimbles have been installed around the eyebolts. The cable parts are shown in figure 3. The length of the wire rope is determined by the pan and tilt angles of the enclosure.

Figure 3

Figure 3 is a photograph of the wire rope section and one of the thimbles as well as one of the oval sleeves. Make sure that the oval sleeve is crimped using the proper crimping tool. A close view of the assembly is shown in Figure 5.

**NOTE: A special crimping tool is required for stainless steel compression sleeves. The use of a tool that is not approved for use with stainless steel compression sleeves will result in reduced ratings for the wire rope assembly.**

**The proper tool to use is produced by:**

**Loos and Company, Cableware Division.**
**901 Industrial Blvd.**
**Naples, Fl 34104-3715**
**1-800-321-5667**

**The correct tool is:**
**No. 0-3/64SC**

**This tool is designed for use with stainless steel compression sleeves. This tool or the equivalent must be used when swaging the compression sleeves.**

**When crimping stainless steel compression sleeves you MUST use one size smaller diameter on the crimping tool. For 1/16” sleeves and cable you MUST use a 3/64” crimp set.**

The cable assembly requires the use of a compression tool to securely fit the oval sleeves. One Systems does not supply this compression tool. The assembly of the cable must be done by one who is experienced and competent in wire rope assembly and is familiar with the operation of the required tools.

See Figures 4 and 5 for details of the proper cable assembly to the enclosure and bracket.

Figure 4 shows both the 103IM and 106IM loudspeakers mounted to the Pole Mount Mini bracket with the cable assemblies included. The length of the wire rope should be adjusted so that there is very mild tension on the cable assembly. The cable assembly should not be loose or have any slack but the cable assembly should not be so tight as to begin pulling the top of the enclosure back toward vertical. The length of the wire rope is determined by the tilt and pan angles of the enclosure.

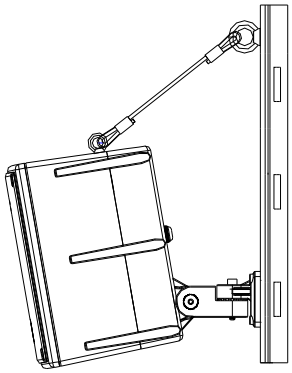

103IM and Pole Mount Mini

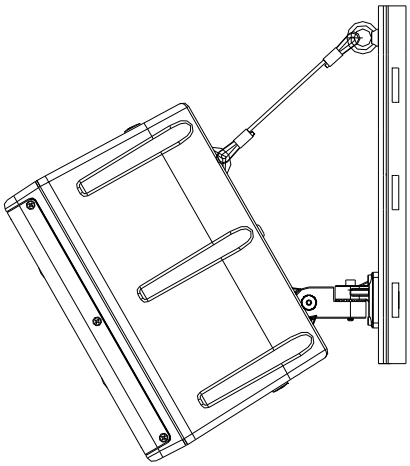

106IM and Pole Mount Mini

Figure 4

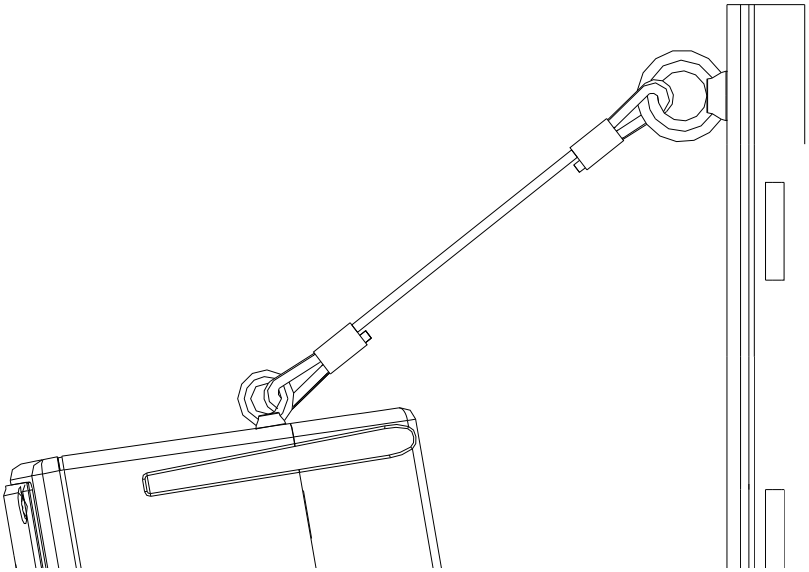

Figure 5

Figure 5 is a close up view of the wire rope assembly. One end is connected to the M8 eyebolt on the Pole Mount Mini and the other end to the eyebolt mounted to the enclosure (103IM shown in Figure 5, for the 108IM the eyebolt in located on the rear of the enclosure near the top).

Note: The ¼ inch thimbles must be spread slightly to fit over the eyebolts and then recompressed.

# APPENDIX 1

## ( Projected Area Values)

The values below should be supplied to the specific pole manufacturer for safety calculations. These values were determined by adding the projected areas of the high frequency horns, the woofer cones and ports to the cross sectional area of the front of each enclosure listed below.

103IM …….. 60 in^2 (38,709 mm^2)

106IM…… 90 in^2 (58,064mm^2)

# POLE MOUNT SYSTEM INSTALLATION

The Pole Mount System is an easy to install and flexible system designed to allow ONE SYSTEMS® loudspeaker systems to be mounted to pole structures. The only products approved for use with the Pole Mount System are the 112IM and 212CIM.

NO OTHER LOUDSPEAKERS SHOULD BE SUBSTITUTED!

The following actions MUST be performed PRIOR to beginning the installation of the Pole Mount System:

1. This installation guide must be completely read and understood

2. The instruction manual "Rigging and Suspension of ONE SYSTEMS Products" must be read and understood. (this instruction manual is available at www.ONESYSTEMS.com in the "Education section of the web site.

3. The manufacturer of the pole MUST be consulted to verify the applicability of the Pole Mount System and ONE SYSTEMS loudspeaker to the specific pole.

4. The Pole Mount System and loudspeaker should be installed only by one Experienced in the overhead suspension of items and familiar with the applicable local and national codes governing installation of these products and also governing the attachment of these products to the specific pole structure.

CAUTION: All structures outdoors are subjected to wind forces. These forces must be considered when suspending any product outdoors. It is necessary to know the "Effective Projected Area" (EPA) of the loudspeaker prior to installation of the loudspeaker and Pole Mount System. This data must be supplied to the pole manufacturer in order to determine safe operation conditions for the loudspeaker and Pole Mount System when mounted to a specific pole. See Appendix 1 of this installation manual for "Equivalent Projected Area (EPA) values for the 112IM and 212CIM. These values may also be found on the ONE SYSTEMS web site at www.ONESYSTEMS.com.

# INSTALLATION

The Pole Mount System consists of three parts: the pole bracket, the loudspeaker bracket, and the Safety Link. The pole bracket is shown in Figure 1. The bracket shown in figure 1 is designed for pole diameters of 8 inches (203.2mm) to 20 inches (508mm). The unique “self adjusting” hinge design of the pole mount will adjust to this specified range of pole diameters. Pole diameters smaller than 8 inches must not be used.

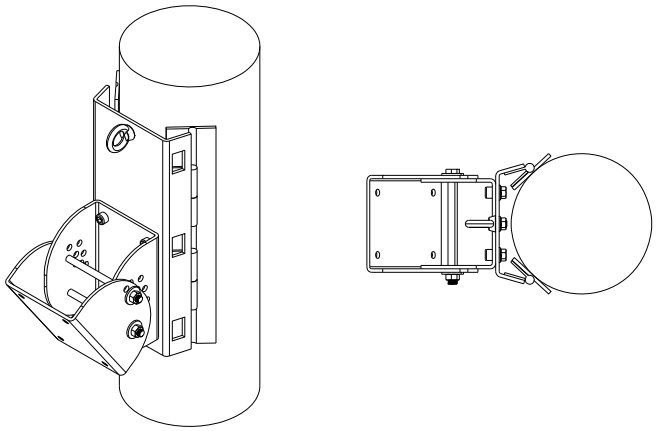

Figure 1.

Figure 1 represents the isometric and top views of the pole bracket, including the loudspeaker bracket section. The loudspeaker bracket is shown seperately in Figure 2.

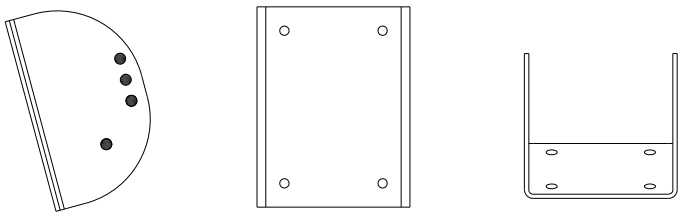

Figure 2.

Figure 3 is a representation of the Safety Link assembly. This assembly MUST be used whenever the Pole Mount System is being used.

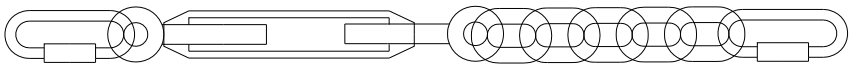

Figure 3

1. Mount the pole mount section (see figure 1) of the bracket to the pole at the desired height on the pole. The bracket is mounted to the pole using BAND-IT stainless steel bands. DO NOT SUSTITUTE bands of other material or other widths! There are three locations on the pole bracket for bands. ALL THREE LOCATIONS MUST BE USED. Figure 4 illustrates the locations for the stainless steel band clamps.

It is REQUIRED that each of the three bands be double wrapped. Double wrapping will insure a strong and secure mounting of the bracket to the pole. The stainless steel banding materials should be as follows:

| | |
|---|---|
| BAND-IT | # C206R9 stainless steel bands |
| BAND-IT | # C25699 buckles |
| BAND-IT | # C00169 tensioning tool |

The stainless steel band is Type 201SS 0.030 inches (0.762mm) thick and 0.750 inches (19mm) wide.

WARNING: Do NOT substitute banding materials or banding dimensions.

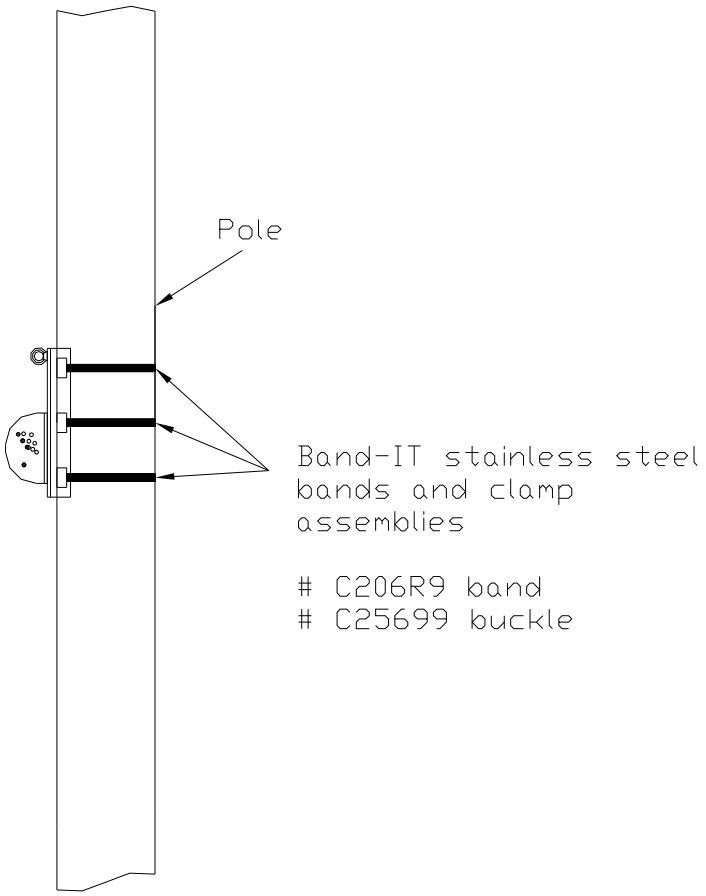


Figure 4.

Installation instructions from BAND-IT should be followed exactly. Operating instructions are supplied with the tensioning tool. (All BAND-IT parts and tools purchased separately. These parts and tools are not supplied by ONE SYSTEMS).

The stainless steel banding material, buckles, and tensioning tools are available from the following locations (or though distributors recommended by these locations):

BAND-IT IDEX, Inc.
4799 Dahlia St.
Denver Colorado 80216
USA
1-800-525-0758

FELIX PONCE
Calle Ignacio Zaragonza No. 8
Colonia Ahuehuetes Atizapan 52953
Edo. de Mexico
(52) 555825 8502

BAND-IT Company Limited
Speedwell Industrial Estate
Stavely, Nr. Chesterfield
Derbyshire, S43 3PF England
Home Sales (44) 1246-479479
Export Sales (44) 1246 479480

BAND-IT Clamps (ASIA) Pte. Ltd.
11 Second Chin Bee Road
Singapore 618777
65-62658853

BAND-IT Shanghai Sales Office
207 room
Wanbao International Business Centre
660# Xinhua Road
Shanghai, China 200052
021-62826348-308

2. Next, the loudspeaker bracket should be mounted to the loudspeaker (ONE SYSTEMS 112IM or 212CIM only) using the supplied M10 stainless steel bolts and internal tooth lock washers. DO NOT SUBSTITUE ANY PARTS

3. Now the M10 forged shoulder “eye” bolt should be installed in the top rear of the loudspeaker enclosure. (note, it may be necessary to remove the rear handle of the loudspeaker enclosure in order to mount the M10 eye bolt).

4. The loudspeaker may now be placed on the pole bracket (see figure 2).

USE EXTREME CAUTION! The loudspeaker is heavy and it is likely that the desired mounting location is high in the air. This process should never be attempted by a single person.

TWO PEOPLE ARE REQUIRED TO MOUNT THE LOUDSPEAKER ENCLOSURE TO THE POLE AND POLE MOUNT ASSEMBLY! (Safety harnesses should always be worn when working from an elevated platform)

First insert the M12 bolt into the pivot point and secure but do not fully tighten using the supplied M12 nylon insert nut.

Now the enclosure may be set at its desired down tilt. The Pole Mount System allows the loudspeaker to be oriented from a 0 degree down tilt to a maximum down tilt of 35 degrees.

UNDER NO CIRCUMSTANCES SHOULD THE LOUDSPEAKER DOWN TILT EXCEED 35 DEGREES FROM VERTICAL!

5. Now the Safety Link must be installed.

INSTALLING THE POLE MOUNT SYSTEM WIGHOUT THE SAFETY LINK IS NOT ALLOWED!

The Safety Link (see figure 3) consists of two stainless steel quick links, a stainless steel turnbuckle, and several links of stainless steel chain.

DO NOT SUBSTITUTE ANY PART OF THIS SAFETY LINK ASSEMBLY!

If the loudspeaker is at 0 degrees from vertical the chain links should not be used. The Safety Link should be tightened by rotating the turnbuckle until there is tension on the Safety Link assembly. Do not over tighten. The purpose of the Safety Link is to slightly remove tension from the main Pole Mount System tilting bracket at the bottom of the assembly. The Safety Link functions as both a safety and as a load bearing assembly.

The Safety Link should be assembled as shown in Figure 3. The stainless steel chain links are not used if the vertical down tilt angle is 0 degrees from vertical. For any other angle the stainless steel chain links should be installed as shown.

Figure 5 shows the loudspeaker assembly and Safety Link in a 0 degrees vertical orientation. Notice that the stainless steel chain links are NOT in the Safety Link assembly!

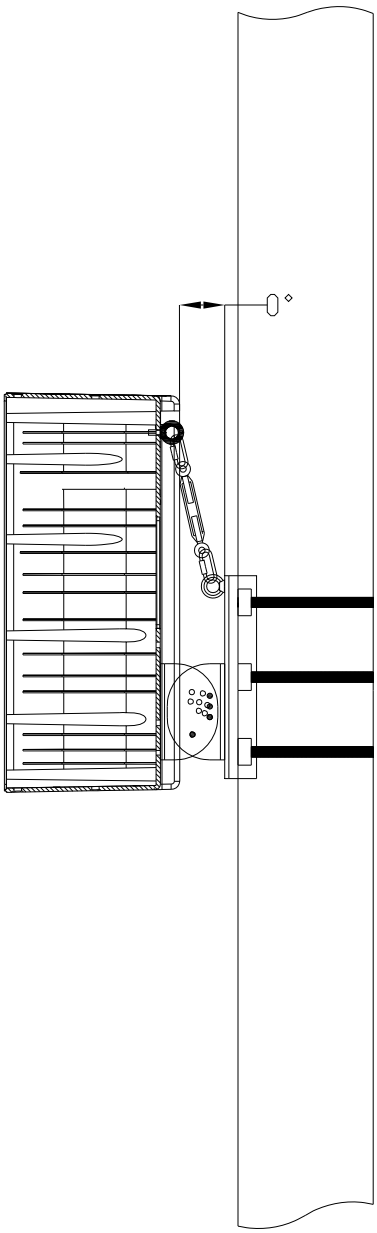


Figure 5.

Figure 6 is an enlarged view of the Safety Link assembly configured for a 0 degree vertical down tilt angle.

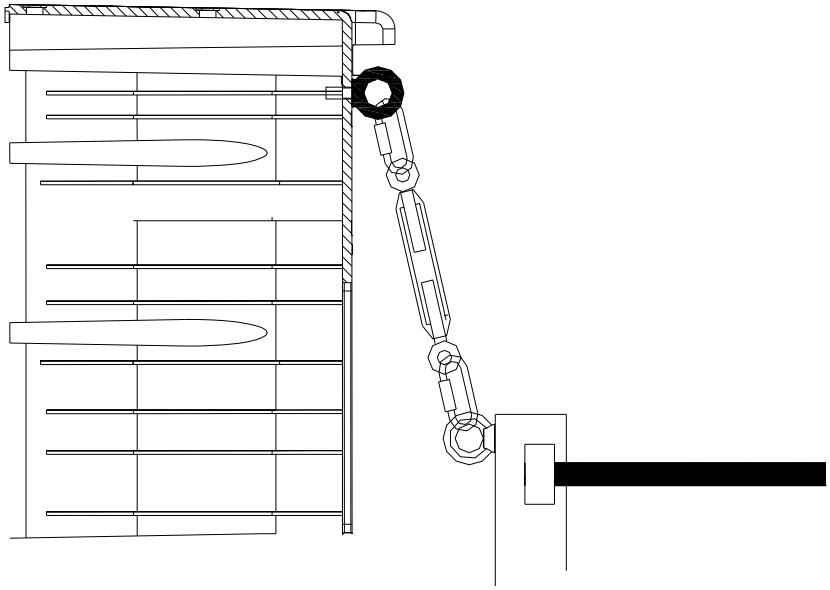

Figure 6.

Warning, if the turnbuckle assembly is turned and the loudspeaker enclosure angle begins to change (if the down tilt angle begins to move toward 0 degrees vertical then the turnbuckle has been OVER TIGHTENED. Turn the turnbuckle until the down tilt angle is set by the M10 thru bolt on the pole bracket.

Angles other than 0 degrees from vertical require the stainless steel chain links to be inserted as shown in Figures 7 and 8.

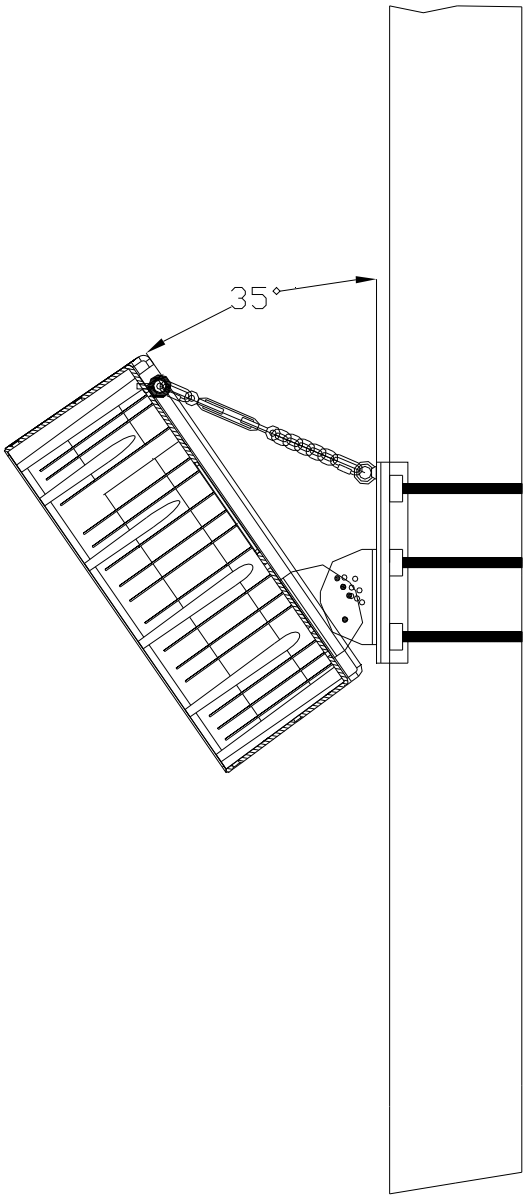


Figure 7.

Figure 7. represents the maximum down tilt angle of 35 degrees from vertical. Figure 8 is a close up view of the Safety Link assembly with the chain configured for this maximum angle. The lower quick link is positioned in various chain segments based on the desired degree of down tilt. The turnbuckle should be adjusted, as described in this section (step 5).

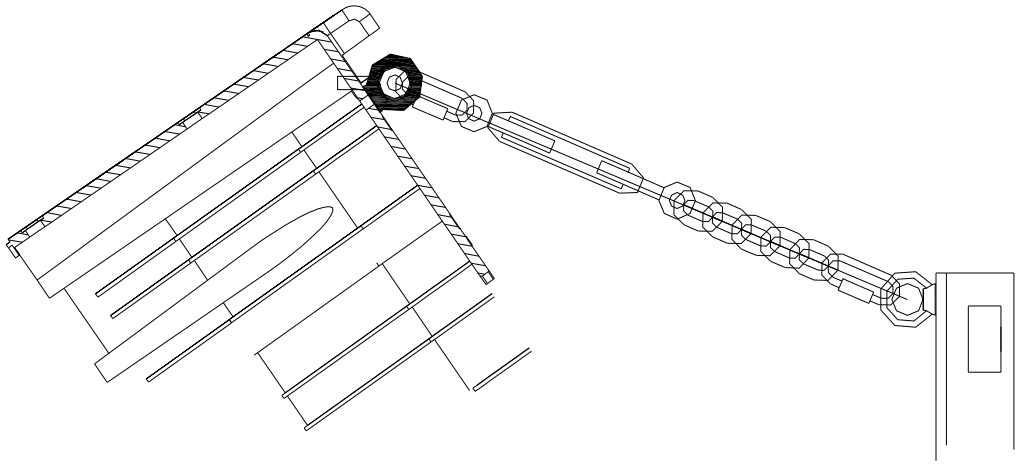

Figure 8.

Figure 9 shows a close up view of the Safety Link with one of the chain links moved to allow for an angle of less than the 35 degree max shown in Figure 8.

In any position, the turnbuckle must be adjusted to allow the proper amount of tension on the Safety Link. The safety link should never pull the loudspeaker up towards vertical. The link should be set in order to eliminate loose chain links only!

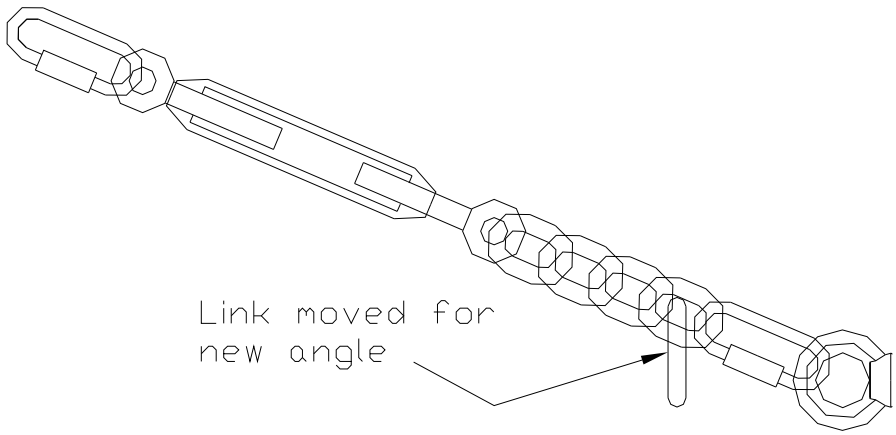


Figure 9.

# APPENDIX 1

## ( Projected Area Values)

The values below should be supplied to the specific pole manufacturer for safety calculations. These values were determined by adding the projected areas of the high frequency horns, the woofer cones and ports to the cross sectional area of the front of each enclosure listed below.

112IM …….. 600 in^2 (387,096 mm^2)

212CIM……. 600 in^2 (387,096mm^2)

**One Systems USA, Inc.** * 6204 Gardendale Dr. * Nashville, TN 37215
**One Systems Group Co. Ltd.** * European Division * Mittelsmoorer Strasse 12 * 28879 Grassberg German
**One Systems Global Co., Ltd**. * 87/114 Modern Town 15th Floor * Sukhumvit 63, Ekkamai Soi 3, Klongtoey, Bangkok, 1010 Thailand

# POLE MOUNT SYSTEM-2 INSTALLATION GUIDE

## November 2009

WARNING: DO NOT attempt to mount multiple brackets side by side using the same stainless steel banding system. The stainless steel banding systems are designed for use with ONE bracket ONLY!

The Pole Mount System-2 is an easy to install and flexible system designed to allow ONE SYSTEMS loudspeaker products to be mounted to pole structures. The only products approved for use with the Pole Mount System-2 are the 112IM and 212CIM.

NOTE: The 112UM and 115UM are compatible with the Pole Mount System-2 if a user supplied stainless steel wire rope assembly is substituted for the Link assembly. The wire rope diameter should be 3/32 inch (2.5mm) or larger.

NO OTHER LOUDSPEAKERS SHOULD BE SUBSTITUTED!

The following actions MUST be performed PRIOR to beginning the installation of the Pole Mount System-2:

1. This installation guide must be completely read and understood

2. The instruction manual "Rigging and Suspension of ONE SYSTEMS Products" must be read and understood. (This instruction manual is available at www.ONESYSTEMS.com in the "Education section of the web site.

3. The manufacturer of the pole MUST be consulted to verify the applicability of the Pole Mount System-2 and ONE SYSTEMS loudspeaker to the specific pole

4. The Pole Mount System-2 and loudspeaker should be installed only by one experienced in the overhead suspension of items and familiar with the applicable local and national codes governing installation of these products and also governing the attachment of these products to the specific pole structure.

CAUTION: All structures outdoors are subjected to wind forces. These forces must be considered when suspending any product outdoors. It is necessary to know the "Effective Projected Area" (EPA) of the loudspeaker prior to installation of the loudspeaker and Pole Mount System-2. This data must be supplied to the pole manufacturer in order to determine safe

operation conditions for the loudspeaker and Pole Mount System-2 when mounted to a specific pole. See Appendix 1 of this installation manual for effective projected areas for each enclosure rated for use with the Pole Mount System-2.
.

# INSTALLATION

The Pole Mount System-2 consists of three parts: the pole bracket, the loudspeaker bracket, and the Link. The bracket is designed for pole diameters of a minimum of 8 inches (203.2mm). Pole diameters smaller than 8 inches must not be used.

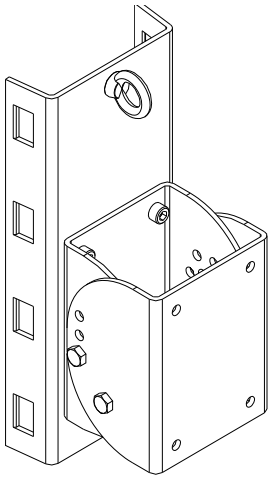

Figure 1

Figure 1 represents the isometric and top views of the pole bracket, including the loudspeaker bracket section. The loudspeaker bracket is shown separately in Figure 2.

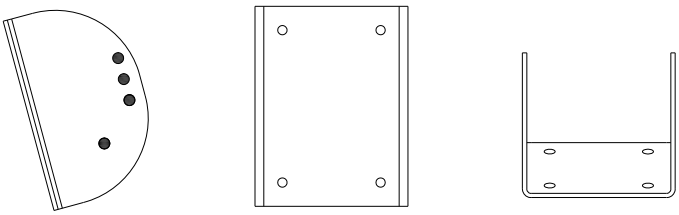

Figure 2

NOTE: The loudspeaker bracket should be removed from the main bracket section prior to mounting the pole bracket to the pole.

Figure 3 is a representation of the Link assembly. This assembly MUST be used whenever the Pole Mount System-2 is being used.

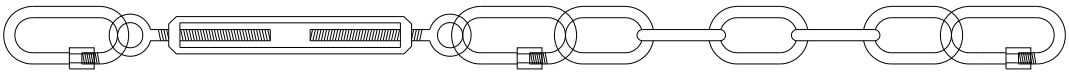

Figure 3

1. Mount the pole mount section (see Figure 1) of the bracket to the pole at the desired height on the pole. The loudspeaker bracket shown in Figure 2 should be removed prior to hanging the pole mount section. The bracket is mounted to the pole using BAND-IT stainless steel bands. DO NOT SUSTITUTE bands of other material or other widths! There are FOUR (4) locations on the pole bracket for bands. ALL FOUR LOCATIONS MUST BE USED. Figure 4 illustrates the locations for the stainless steel band clamps.

IMPORTANT: It is REQUIRED that each of the four bands be DOUBLE wrapped. Double wrapping will insure a strong and secure mounting of the bracket to the pole. The stainless steel banding materials should be as follows:

| | |
|---|---|
| BAND-IT | # C206R9 stainless steel bands |
| BAND-IT | # C25699 buckles |
| BAND-IT | # C00169 tensioning tool |

The stainless steel band is Type 201SS 0.030 inches (0.762mm) thick and 0.750 inches (19mm) wide.

WARNING: Do NOT substitute banding materials or banding dimensions.

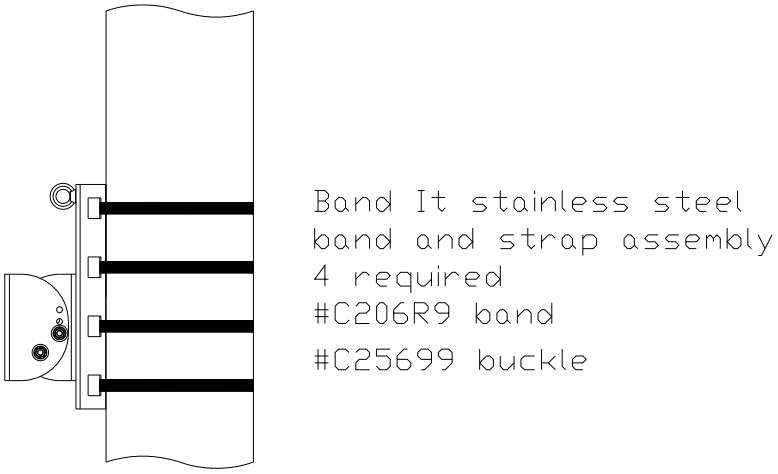


Figure 4

Installation instructions from BAND-IT should be followed exactly. Operating instructions are supplied with the tensioning tool. (All BAND-IT parts and tools purchased separately. These parts and tools are not supplied by ONE SYSTEMS).

The stainless steel banding material, buckles, and tensioning tools are available from the following locations (or though distributors recommended by these locations):

BAND-IT IDEX, Inc.
4799 Dahlia St.
Denver Colorado 80216
USA
1-800-525-0758

P&C Industrial Supplies
(A U.S.A. BAND-IT Distributor in Michigan)
1-800922-9291

FELIX PONCE
Calle Ignacio Zaragonza No. 8
Colonia Ahuehuetes Atizapan 52953
Edo. de Mexico
(52) 555825 8502

BAND-IT Company Limited
Speedwell Industrial Estate
Stavely, Nr. Chesterfield
Derbyshire, S43 3PF England
Home Sales (44) 1246-479479
Export Sales (44) 1246 479480

BAND-IT Clamps (ASIA) Pte. Ltd.
11 Second Chin Bee Road
Singapore 618777
65-62658853

BAND-IT Shanghai Sales Office
207 room
Wanbao International Business Centre
660# Xinhua Road
Shanghai, China 200052
021-62826348-308

2. Next, the loudspeaker bracket should be mounted to the loudspeaker (ONE SYSTEMS 112IM, 212CIM, 112UM or 115UM only) using the supplied M10 stainless steel bolts and internal tooth lock washers. DO NOT SUBSTITUE ANY PARTS

NOTE: There are 8 each hex head M10 bolts supplied in the mounting kit of the Pole Mount System-2. When mounting the 115TW, 112UM and 115UM (wood) enclosures to the Pole

Mount System-2 use 4 each of the 45mm (longer) M10 bolts. The 4 shorter M10 bolts are used for the IM series injection molded enclosures.

3. Now the M10 forged shoulder “eye” bolt should be installed in the top rear of the loudspeaker enclosure.

NOTE: There two (2) forged shoulder eye bolts included. One has a 17mm threaded section and the second has a 40mm threaded section. Use the 17mm threaded section eye bolt for the 112IM and 212CIM enclosures. Use the 40mm threaded section eye bolt for the 112UM and 115UM wood enclosure.

The shoulder of the eye bolt MUST be flush and in contact with the surface of the enclosure.

4. The loudspeaker may now be placed on the pole bracket (see figure 2).

USE EXTREME CAUTION! The loudspeaker is heavy and it is likely that the desired mounting location is high in the air. This process should never be attempted by a single person.

TWO PEOPLE ARE REQUIRED TO MOUNT THE LOUDSPEAKER ENCLOSURE TO THE POLE AND POLE MOUNT ASSEMBLY! (Safety harnesses should always be worn when working from an elevated platform)

First insert the M10 bolt into the pivot point and secure but do not fully tighten using the supplied M10 nylon insert nut.

Now the enclosure may be set at its desired down tilt using the second M10 bolt (“Tilt” bolt). The Pole Mount System-2 allows the loudspeaker to be oriented from a 0 degree down tilt to a maximum down tilt of 35 degrees. Now both M10 bolts should be tightened.

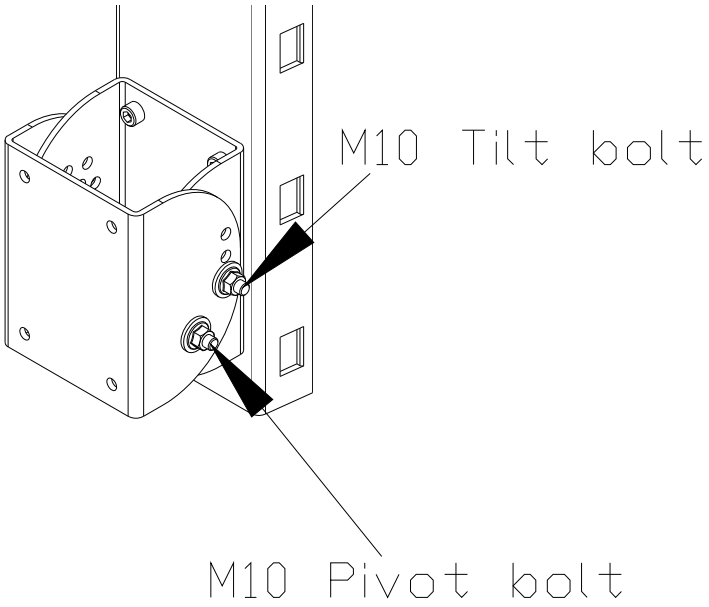

UNDER NO CIRCUMSTANCES SHOULD THE LOUDSPEAKER DOWN TILT EXCEED 35 DEGREES FROM VERTICAL!

5. Now the Link must be installed.

INSTALLING THE POLE MOUNT SYSTEM-2 WITHOUT THE LINK IS NOT ALLOWED!

The Link (see figure 3) consists of stainless steel quick links, a stainless steel turnbuckle, and several links of stainless steel chain.
DO NOT SUBSTITUTE ANY PART OF THIS LINK ASSEMBLY!

The Link should be tightened by rotating the turnbuckle until there is tension on the Link assembly. Do not over tighten. The purpose of the Link is to provide support for the main Pole Mount System-2 tilting bracket at the bottom of the assembly.

Make sure to use the appropriate combination of Link parts to insure proper connection between the Pole Mount System-2 and the specific One Systems enclosure. The required combination of Link parts is determined by the down tilt angle of the enclosure, but the turnbuckle must always be used.

The assembly may be configured with any combination of turnbuckle, chain link sections and quick link in order to achieve the proper tension on the system.

Warning, if the turnbuckle assembly is turned and the loudspeaker enclosure angle begins to change (if the down tilt angle begins to move toward 0 degrees vertical then the turnbuckle has been OVER TIGHTENED. Turn the turnbuckle until the down tilt angle is set by the M10 thru bolt on the pole bracket.

Figure 5 shows the loudspeaker assembly and Link in a 0 degrees vertical orientation.

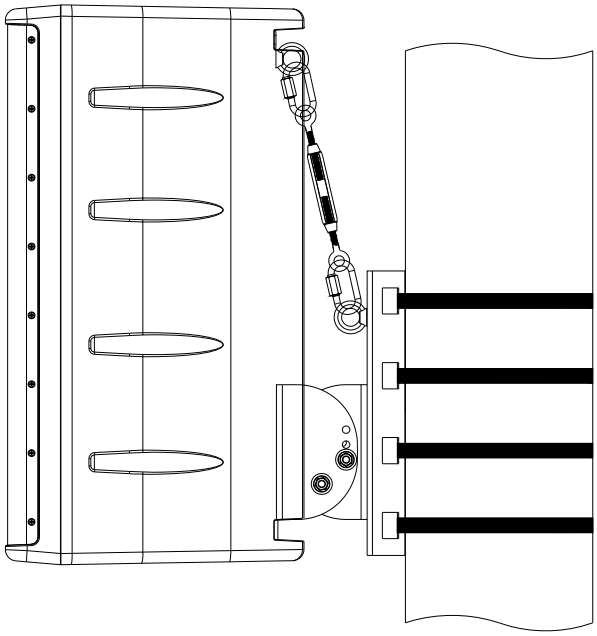

Figure 5

Angles other than 0 degrees from vertical require the turnbuckle to be adjusted. Certain enclosures may also require the addition of the chain depending on the distance between the two eyebolts.

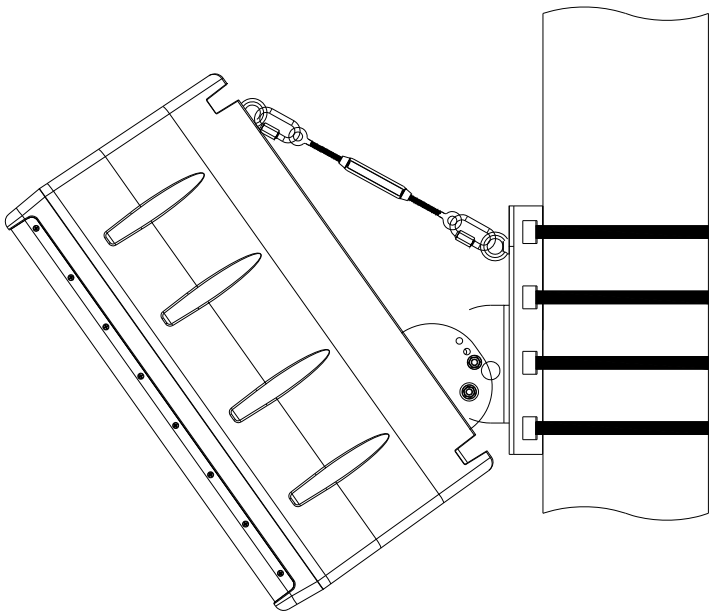

Figure 6

Figure 6 represents the maximum down tilt angle of 35 degrees from vertical.

In any position, the turnbuckle must be adjusted to allow the proper amount of tension on the Link. The link should never pull the loudspeaker up towards vertical.

Secondary safety cables are STRONGLY recommended and should be secured to a structural point NOT associated with the PT bracket or loudspeaker.

# APPENDIX 1

## Projected Area Values

The values below should be supplied to the specific pole manufacturer for safety calculations. These values were determined by adding the projected areas of the high frequency horns, the woofer cones and ports to the cross sectional area of the front of each enclosure listed below.

112IM …… 600 in^2 (387,096 mm^2)

212CIM…… 600 in^2 (387,096mm^2)

112UM**.....**…… 430 in^2 (276,480mm^2)

115UM…….. 571 in^2 (368,220mm^2)

# POLE MOUNT SYSTEM EX INSTALLATION

The Pole Mount System EX is an easy to install and flexible system designed to allow ONE SYSTEMS® loudspeaker systems to be mounted to pole structures. The only products approved for use with the Pole Mount System EX are the 212IM, 312CIM and the Cross Field Array.

NO OTHER LOUDSPEAKERS SHOULD BE SUBSTITUTED!

The following actions MUST be performed PRIOR to beginning the installation of the Pole Mount System EX:

1. This installation guide must be completely read and understood

2. The instruction manual "Rigging and Suspension of ONE SYSTEMS Products" must be read and understood. (This instruction manual is available at www.ONESYSTEMS.com in the "Education section of the web site.

3. The manufacturer of the pole MUST be consulted to verify the applicability of the Pole Mount System EX and ONE SYSTEMS loudspeaker to the specific pole

4. The Pole Mount System EX loudspeaker should be installed only by one experienced in the overhead suspension of items and familiar with the applicable local and national codes governing installation of these products and also governing the attachment of these products to the specific pole structure.

CAUTION: All structures outdoors are subjected to wind forces. These forces must be considered when suspending any product outdoors. It is necessary to know the "Effective Projected Area" (EPA) of the loudspeaker prior to installation of the loudspeaker and Pole Mount System EX. This data must be supplied to the pole manufacturer in order to determine safe operation conditions for the loudspeaker and Pole Mount System EX

when mounted to a specific pole. See Appendix 1 of this installation manual for effective projected areas for each enclosure rated for use with the Pole Mount System EX.

# INSTALLATION

The Pole Mount System EX consists of three parts: the pole bracket, the loudspeaker bracket, and the Safety Link. The pole bracket is shown in Figure 1. The bracket shown in figure 1 is designed for pole diameters of 8 inches (203.2mm) to 20 inches (508mm). The unique “self adjusting” hinge design of the pole mount will adjust to this specified range of pole diameters. Pole diameters smaller than 8 inches must not be used.

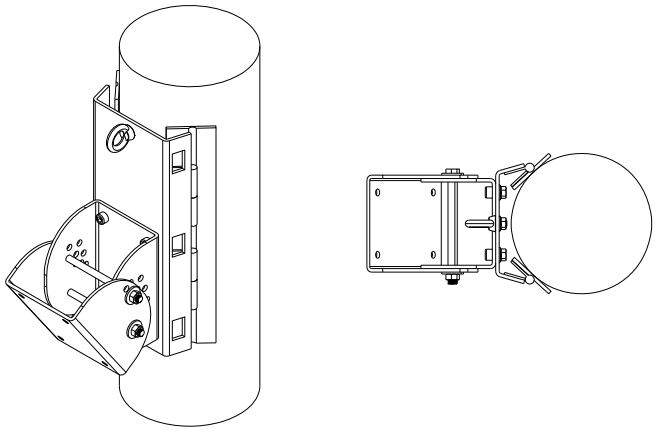

Figure 1.

Figure 1 represents the isometric and top views of the pole bracket, including the loudspeaker bracket section. The loudspeaker bracket is shown seperately in Figure 2.

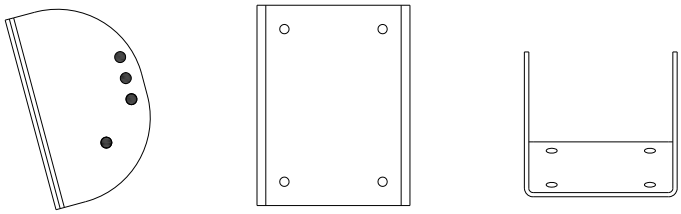

Figure 2.

Figure 3 is a representation of the Safety Link assembly. This assembly MUST be used whenever the Pole Mount System EX is being used.

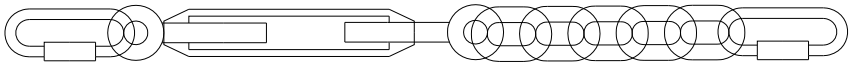

Figure 3

1. Mount the pole mount section (see figure 1) of the bracket to the pole at the desired height on the pole. The bracket is mounted to the pole using BAND-IT stainless steel bands. DO NOT SUSTITUTE bands of other material or other widths! There are four locations on the pole bracket for bands. ALL FOUR LOCATIONS MUST BE USED. Figure 4 illustrates the locations for the stainless steel band clamps.

It is REQUIRED that each of the four bands be DOUBLE wrapped. Double wrapping will insure a strong and secure mounting of the bracket to the pole. The stainless steel banding materials should be as follows:

| | |
|---|---|
| BAND-IT | # C206R9 stainless steel bands |
| BAND-IT | # C25699 buckles |
| BAND-IT | # C00169 tensioning tool |

The stainless steel band is Type 201SS 0.030 inches (0.762mm) thick and 0.750 inches (19mm) wide.

WARNING: Do NOT substitute banding materials or banding dimensions.

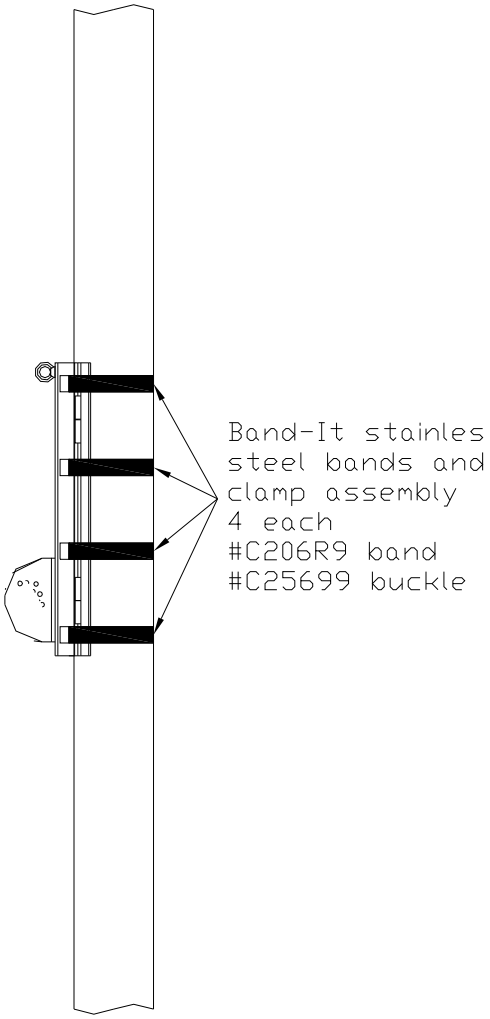


Figure 4.

Installation instructions from BAND-IT should be followed exactly. Operating instructions are supplied with the tensioning tool. (All BAND-IT parts and tools purchased separately. These parts and tools are not supplied by ONE SYSTEMS).

The stainless steel banding material, buckles, and tensioning tools are available from the following locations (or though distributors recommended by these locations):

BAND-IT IDEX, Inc.
4799 Dahlia St.
Denver Colorado 80216
USA
1-800-525-0758

FELIX PONCE
Calle Ignacio Zaragonza No. 8
Colonia Ahuehuetes Atizapan 52953
Edo. de Mexico
(52) 555825 8502

BAND-IT Company Limited
Speedwell Industrial Estate
Stavely, Nr. Chesterfield
Derbyshire, S43 3PF England
Home Sales (44) 1246-479479
Export Sales (44) 1246 479480

BAND-IT Clamps (ASIA) Pte. Ltd.
11 Second Chin Bee Road
Singapore 618777
65-62658853

BAND-IT Shanghai Sales Office
207 room
Wanbao International Business Centre
660# Xinhua Road
Shanghai, China 200052
021-62826348-308

2. Next, the loudspeaker bracket should be mounted to the loudspeaker (ONE SYSTEMS 212IM, 312CIM or Cross Field Array only) using the supplied M10 stainless steel bolts and internal tooth lock washers. DO NOT SUBSTITUE ANY PARTS

3. Now the M10 forged shoulder “eye” bolt should be installed in the top rear of the loudspeaker enclosure. (note, it may be necessary to remove the rear handle of the loudspeaker enclosure in order to mount the M10 eye bolt).

4. The loudspeaker may now be placed on the pole bracket (see figure 2).

USE EXTREME CAUTION! The loudspeaker is heavy and it is likely that the desired mounting location is high in the air. This process should never be attempted by a single person.

TWO PEOPLE ARE REQUIRED TO MOUNT THE LOUDSPEAKER ENCLOSURE TO THE POLE AND POLE MOUNT ASSEMBLY EX! (Safety harnesses should always be worn when working from an elevated platform)

First insert the M12 bolt into the pivot point and secure but do not fully tighten using the supplied M12 nylon insert nut.

Now the enclosure may be set at its desired down tilt. The Pole Mount System EX allows the loudspeaker to be oriented from a 0 degree down tilt to a maximum down tilt of 35 degrees.

UNDER NO CIRCUMSTANCES SHOULD THE LOUDSPEAKER DOWN TILT EXCEED 35 DEGREES FROM VERTICAL!

5. Now the Safety Link must be installed.

INSTALLING THE POLE MOUNT SYSTEM EX WITHOUT THE SAFETY LINK IS NOT ALLOWED!

The Safety Link (see figure 3) consists of two stainless steel quick links, a stainless steel turnbuckle, and several links of stainless steel chain.

DO NOT SUBSTITUTE ANY PART OF THIS SAFETY LINK ASSEMBLY!

The Safety Link should be tightened by rotating the turnbuckle until there is tension on the Safety Link assembly. Do not over tighten. The purpose of the Safety Link is to slightly remove tension from the main Pole Mount System EX tilting bracket at the bottom of the assembly. The Safety Link functions as both a safety and as a load bearing assembly.

The Safety Link should be assembled as shown in Figure 3. Make sure to use the appropriate number of chain links to insure proper connection between the Pole Mount System EX and the specific One Systems enclosure.

Figure 5 shows the loudspeaker assembly and Safety Link in a 0 degrees vertical orientation.

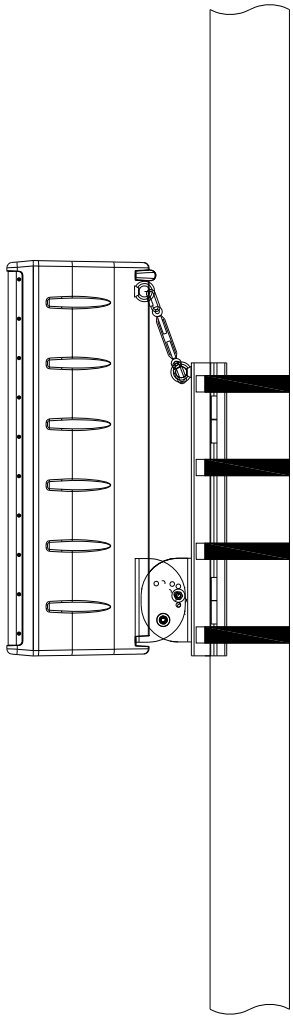

Figure 5.

Figure 6 is an enlarged view of the Safety Link assembly configured for a 0 degree vertical down tilt angle.

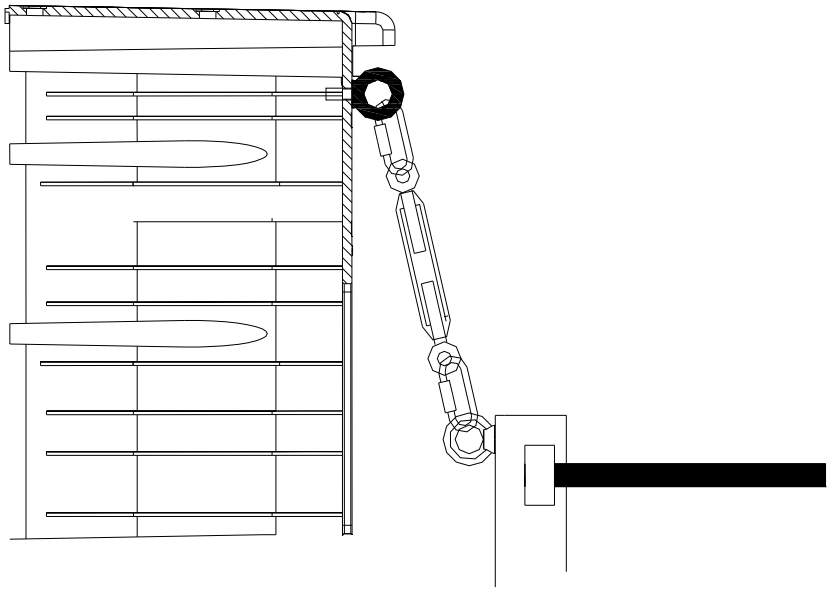

Figure 6.

Warning, if the turnbuckle assembly is turned and the loudspeaker enclosure angle begins to change (if the down tilt angle begins to move toward 0 degrees vertical then the turnbuckle has been OVER TIGHTENED. Turn the turnbuckle until the down tilt angle is set by the M10 thru bolt on the pole bracket.

Angles other than 0 degrees from vertical require the stainless steel chain links to be inserted as shown in Figures 7 and 8.

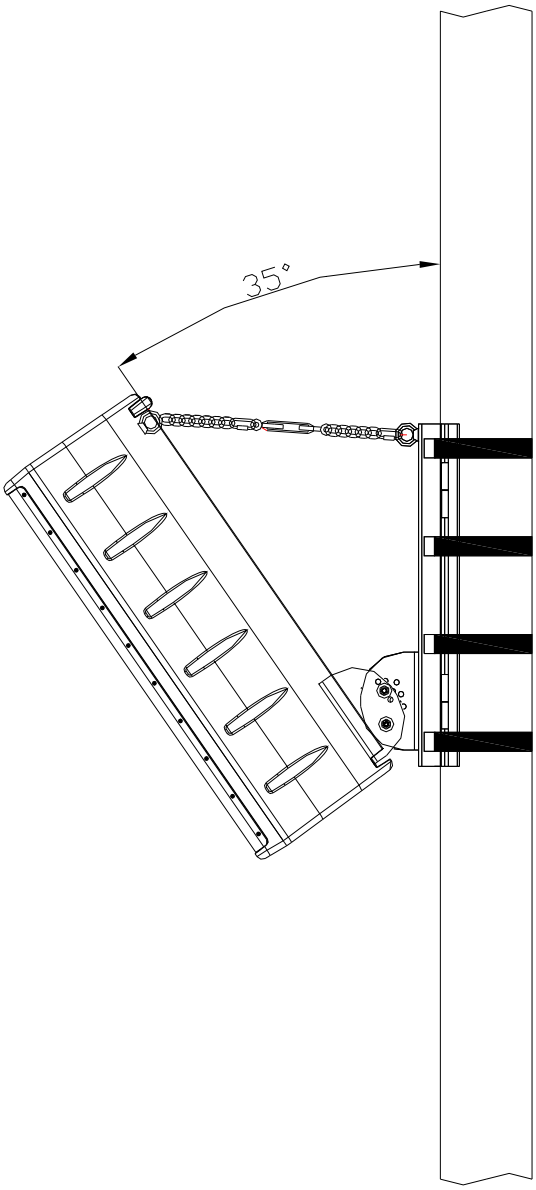


Figure 7.

Figure 7. represents the maximum down tilt angle of 35 degrees from vertical. Figure 8 is a close up view of the Safety Link assembly with the chain configured for this maximum angle. The lower quick link is positioned in various chain segments based on the desired degree of down tilt. The turnbuckle should be adjusted, as described in this section

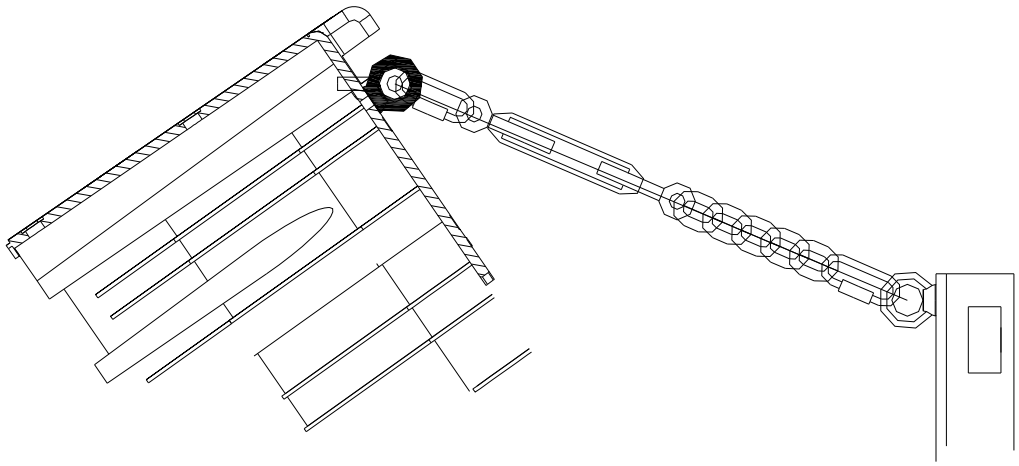

Figure 8.

Figure 9 shows a close up view of the Safety Link with one of the chain links moved to allow for an angle of less than the 35 degree max shown in Figure 8.

In any position, the turnbuckle must be adjusted to allow the proper amount of tension on the Safety Link. The safety link should never pull the loudspeaker up towards vertical. The link should be set in order to eliminate loose chain links only!

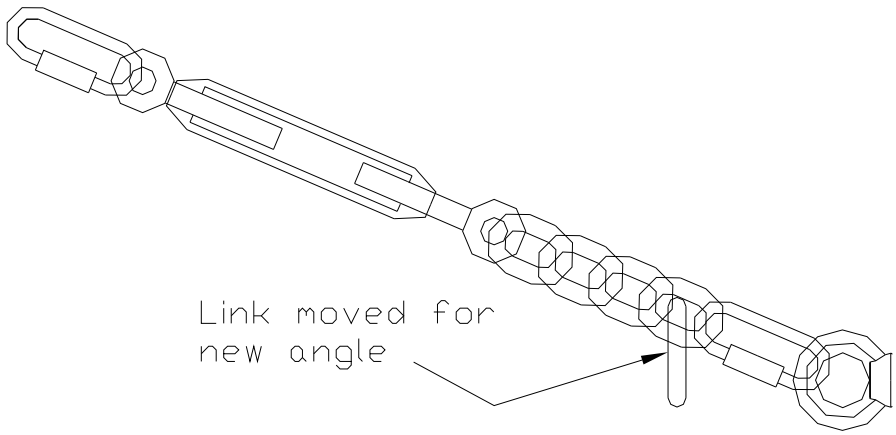


Figure 9.

# APPENDIX 1

## ( Projected Area Values)

The values below should be supplied to the specific pole manufacturer for safety calculations. These values were determined by adding the projected areas of the high frequency horns, the woofer cones and ports to the cross sectional area of the front of each enclosure listed below.

212IM …….. 804 in^2 (550,000 mm^2)

312CIM……. 804 in^2 (550,000mm^2)

Cross Field Array…….. 2,708in^2 (1,750,000mm^2)

**One Systems USA, Inc.** * 6204 Gardendale Dr. * Nashville, TN 37215
**One Systems Group Co. Ltd.** * European Division * Mittelsmoorer Strasse 12 * 28879 Grassberg German
**One Systems Global Co., Ltd**. * 87/114 Modern Town 15th Floor * Sukhumvit 63, Ekkamai Soi 3, Klongtoey, Bangkok, 1010 Thailand

# POLE MOUNT SYSTEM EX-2 INSTALLATION GUIDE

**November 2009**

WARNING: DO NOT attempt to mount multiple brackets side by side using the same stainless steel banding system. The stainless steel banding systems are designed for use with ONE bracket ONLY!

The Pole Mount System EX-2 is an easy to install and flexible system designed to allow ONE SYSTEMS loudspeaker systems to be mounted to pole structures. The only products approved for use with the Pole Mount System EX-2 are the 212IM, 312CIM, 115TW and the Cross Field Array (CFA).

NO OTHER LOUDSPEAKERS SHOULD BE SUBSTITUTED!

The following actions MUST be performed PRIOR to beginning the installation of the Pole Mount System EX-2:

1. This installation guide must be completely read and understood

2. The instruction manual "Rigging and Suspension of ONE SYSTEMS Products" must be read and understood. (This instruction manual is available at www.ONESYSTEMS.com in the "Education section of the web site.

3. The manufacturer of the pole MUST be consulted to verify the applicability of the Pole Mount System EX-2 and ONE SYSTEMS loudspeaker to the specific pole

4. The Pole Mount System EX-2 loudspeaker should be installed only by one experienced in the overhead suspension of items and familiar with the applicable local and national codes governing installation of these products and also governing the attachment of these products to the specific pole structure.

CAUTION: All structures outdoors are subjected to wind forces. These forces must be considered when suspending any product outdoors. It is necessary to know the "Effective Projected Area" (EPA) of the loudspeaker prior to installation of the loudspeaker and Pole Mount System EX-2. This data must be supplied to the pole manufacturer in order to determine safe operation conditions for the loudspeaker and Pole Mount System EX-2 when mounted to a specific pole. See Appendix 1 of this installation manual for effective projected areas for each enclosure rated for use with the Pole Mount System EX-2.

# INSTALLATION

The Pole Mount System EX-2 consists of three parts: the pole bracket, the loudspeaker bracket, and the Link. The bracket is designed for pole diameters of a minimum of 8 inches (203.2mm). Pole diameters smaller than 8 inches must not be used.

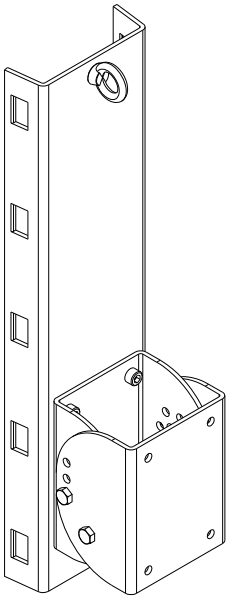

Figure 1

Figure 1 represents the isometric and top views of the pole bracket, including the loudspeaker bracket section.

The loudspeaker bracket is shown separately in Figure 2.

NOTE: The loudspeaker bracket should be removed from the main bracket section prior to mounting the pole bracket to the pole.

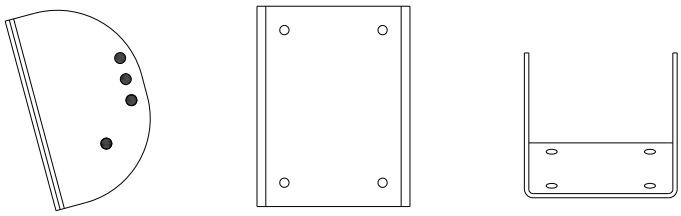

Figure 2

Figure 3 is a representation of the Link assembly. This assembly MUST be used whenever the Pole Mount System EX-2 is being used.

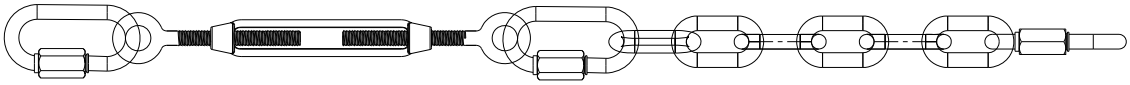

Figure 3

1. Mount the pole mount section (see figure 1) of the bracket to the pole at the desired height on the pole. The loudspeaker bracket shown in Figure 2 should be removed prior to hanging the pole mount section. The bracket is mounted to the pole using BAND-IT stainless steel bands. DO NOT SUSTITUTE bands of other material or other widths! There are FIVE locations on the pole bracket for bands. ALL FIVE LOCATIONS MUST BE USED. Figure 4 illustrates the locations for the stainless steel band clamps.

IMPORTANT: It is REQUIRED that each of the five bands be DOUBLE wrapped. Double wrapping will insure a strong and secure mounting of the bracket to the pole. The stainless steel banding materials should be as follows:

| | |
|---|---|
| BAND-IT | # C206R9 stainless steel bands |
| BAND-IT | # C25699 buckles |
| BAND-IT | # C00169 tensioning tool |

The stainless steel band is Type 201SS 0.030 inches (0.762mm) thick and 0.750 inches (19mm) wide.

WARNING: Do NOT substitute banding materials or banding dimensions.

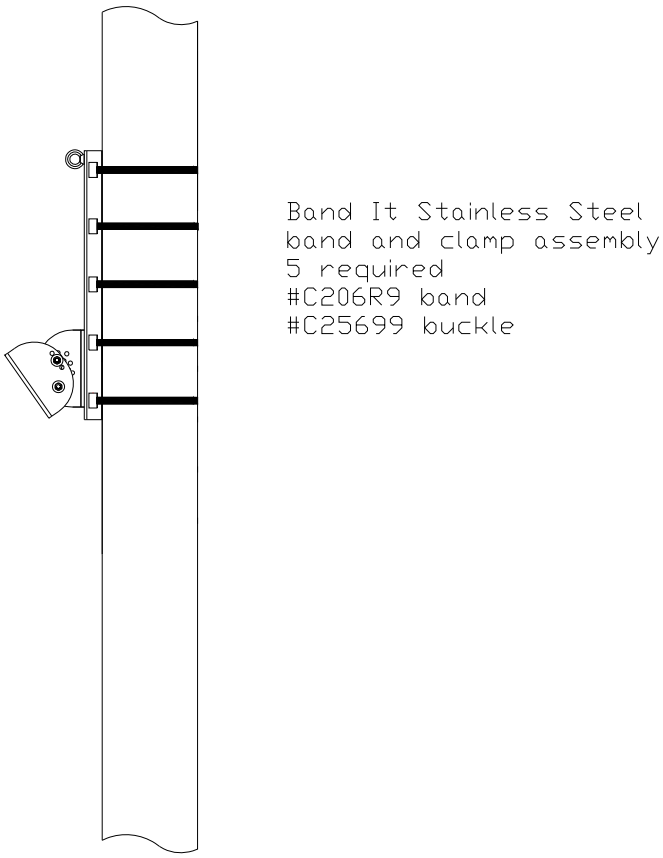


Figure 4

Installation instructions from BAND-IT should be followed exactly. Operating instructions are supplied with the tensioning tool. (All BAND-IT parts and tools purchased separately. These parts and tools are not supplied by ONE SYSTEMS).

The stainless steel banding material, buckles, and tensioning tools are available from the following locations (or though distributors recommended by these locations):

BAND-IT IDEX, Inc.
4799 Dahlia St.
Denver Colorado 80216
USA
1-800-525-0758

P&C Industrial Supplies
(U.S.A. Distributor of BAND-IT in Michigan)

FELIX PONCE
Calle Ignacio Zaragonza No. 8
Colonia Ahuehuetes Atizapan 52953
Edo. de Mexico
(52) 555825 8502

BAND-IT Company Limited
Speedwell Industrial Estate
Stavely, Nr. Chesterfield
Derbyshire, S43 3PF England
Home Sales (44) 1246-479479
Export Sales (44) 1246 479480

BAND-IT Clamps (ASIA) Pte. Ltd.
11 Second Chin Bee Road
Singapore 618777
65-62658853

BAND-IT Shanghai Sales Office
207 room
Wanbao International Business Centre
660# Xinhua Road
Shanghai, China 200052
021-62826348-308

2. Next, the loudspeaker bracket should be mounted to the loudspeaker (ONE SYSTEMS 212IM, 312CIM or Cross Field Array only) using the supplied M10 stainless steel bolts and internal tooth lock washers. DO NOT SUBSTITUE ANY PARTS

NOTE: There are 8 each hex head M10 bolts supplied in the mounting kit of the Pole Mount System EX-2. When mounting the 115TW (wood) enclosures to the Pole Mount System EX-2 use 4 each of the 45mm (longer) M10 bolts. The 4 shorter M10 bolts are used for the IM series injection molded enclosures and the Cross Field Array (CFA).

3. Now the M10 forged shoulder “eye” bolt should be installed in the top rear of the loudspeaker enclosure.

NOTE: There two (2) forged shoulder eye bolts included. One has a 17mm threaded section and the second has a 40mm threaded section. Use the 17mm threaded section eye bolt for the 212IM and 312CIM as well as the CFA enclosures. Use the 40mm threaded section eye bolt for the 115TW wood enclosure.

4. The loudspeaker may now be placed on the pole bracket (see figure 2).

USE EXTREME CAUTION! The loudspeaker is heavy and it is likely that the desired mounting location is high in the air. This process should never be attempted by a single person.

TWO PEOPLE ARE REQUIRED TO MOUNT THE LOUDSPEAKER ENCLOSURE TO THE POLE AND POLE MOUNT SYSTEM EX-2! (Safety harnesses should always be worn when working from an elevated platform)

First insert the M10 bolt into the pivot point and secure but do not fully tighten using the supplied M10 nylon insert nut.Now the enclosure may be set at its desired down tilt using the second M10 bolt (“Tilt” bolt). The Pole Mount System EX-2 allows the loudspeaker to be oriented from a

0 degree down tilt to a maximum down tilt of 35 degrees. Now both M10 bolts should be tightened

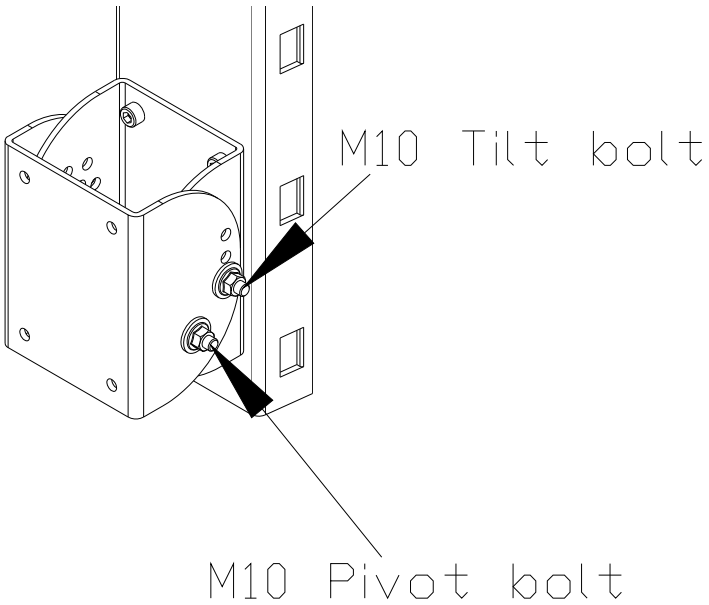


UNDER NO CIRCUMSTANCES SHOULD THE LOUDSPEAKER DOWN TILT EXCEED 35 DEGREES FROM VERTICAL!

5. Now the Link must be installed.

INSTALLING THE POLE MOUNT SYSTEM EX-2 WITHOUT THE LINK IS NOT ALLOWED!

The Link (see figure 3) consists of a stainless steel quick links, a stainless steel turnbuckle, and several links of stainless steel chain.

DO NOT SUBSTITUTE ANY PART OF THIS LINK ASSEMBLY!

The Link should be tightened by rotating the turnbuckle until there is tension on the Link assembly. Do not over tighten. The purpose of the Link is to provide support for the main Pole Mount System EX-2 tilting bracket at the bottom of the assembly.

Make sure to use the appropriate combination of Link parts to insure proper connection between the Pole Mount System EX-2 and the specific One Systems enclosure. The required combination of Link parts is determined by the down tilt angle of the enclosure, but the turnbuckle must always be used.

The assembly may be configured with any combination of turnbuckle, chain link sections and quick link in order to achieve the proper tension on the system. In certain situations only the turnbuckle will need to be used.

Warning, if the turnbuckle assembly is turned and the loudspeaker enclosure angle begins to change (if the down tilt angle begins to move toward 0 degrees vertical then the turnbuckle has been OVER TIGHTENED. Turn the turnbuckle until the down tilt angle is set by the M10 thru bolt on the pole bracket.

Figure 5 shows the loudspeaker assembly (212IM/312CIM) and Link in a 0 degrees vertical orientation. The assembly may be configured with any combination of turnbuckle, chain link sections and quick link in order to achieve the proper tension on the system. In the image below there is one turnbuckle (always required) and there are three quick links.

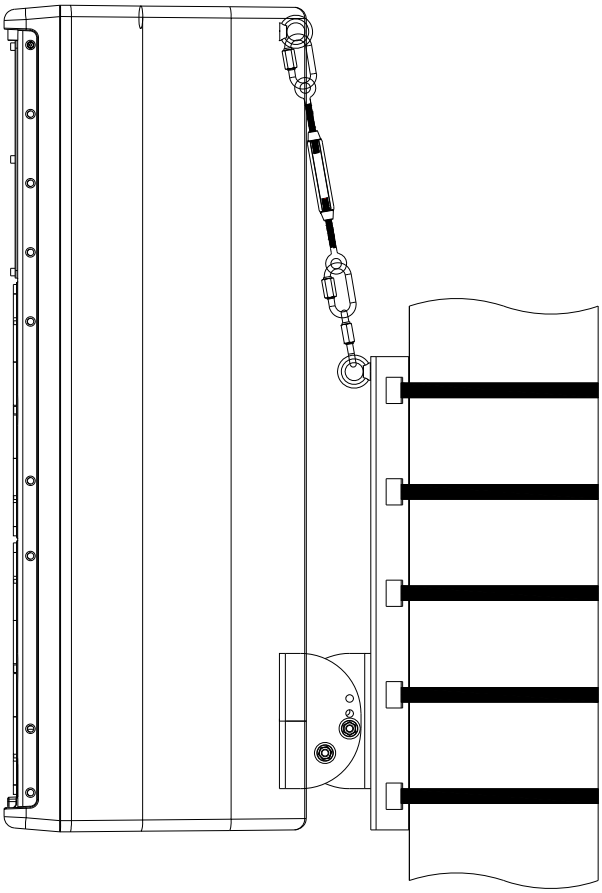

Figure 5

Angles other than 0 degrees from vertical require the stainless steel chain links to be inserted as shown in Figures 6 and 7.

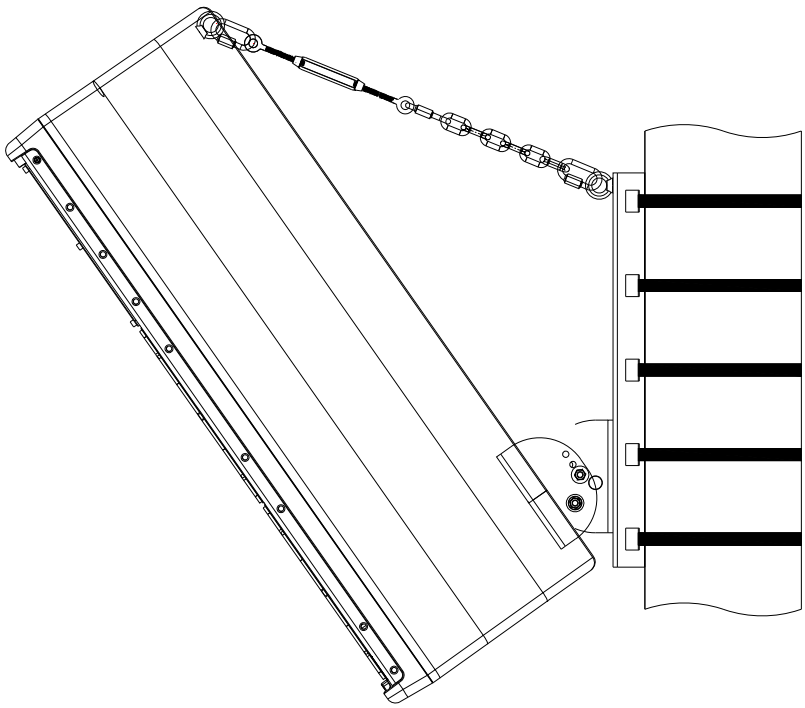

Figure 6

Figure 6 represents the maximum down tilt angle of 35 degrees from vertical and is shown with the chain section, three quick links and the turnbuckle.

Angles of less then 35 degrees may require that sections of the chain be dropped. This is shown in Figure 7. Note that one of the Links has been dropped to allow for an angle of less than the 35 degrees.

In any position, the turnbuckle must be adjusted to allow the proper amount of tension on the Link. The link should never pull the loudspeaker up towards vertical but should always have slight tension.

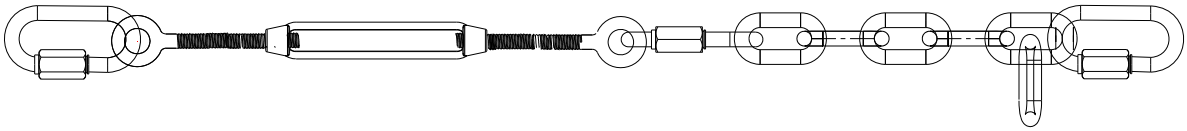

Figure 7

Secondary safety cables are STRONGLY recommended and should be secured to a structural point NOT associated with the PT bracket or loudspeaker.

# APPENDIX 1

## Projected Area Values

The values below should be supplied to the specific pole manufacturer for safety calculations. These values were determined by adding the projected areas of the high frequency horns, the woofer cones and ports to the cross sectional area of the front of each enclosure listed below.

212IM …… 804 in^2 (550,000 mm^2)

312CIM…… 804 in^2 (550,000mm^2)

Cross Field Array…… 2,708in^2 (1,750,000mm^2)

115TW…… 800in^2 (516,130mm^2)

# POLE MOUNT MINI™

ONE SYSTEMS®

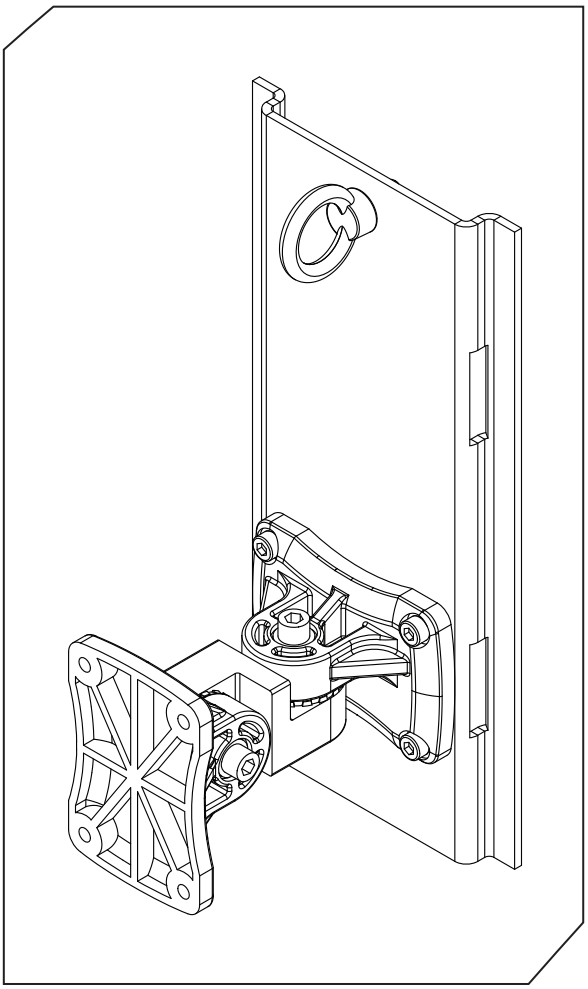

The Pole Mount Mini was designed to mount many of ONE SYSTEMS loudspeaker enclosures to a wide variety of pole diameters. The Pole Mount Mini may be used on the flat surfaces of square and rectangular poles or circular poles. The minimum rectangular/square pole face dimension is 4.5 inches (114mm). It is necessary to consult the pole manufacturer prior to installation to insure safe operating limits based on the pole construction, local wind patterns, and compliance with local and national codes.

The Pole Mount Mini is designed to be used with the ONE SYSTEMS 103IM and 106IM loudspeakers ONLY! The system consists of a pole mounting bracket that includes a One Systems PT-10 pan and tilt bracket as part of the assembly. The tilt function allows pan and tilt angles in 10 degree increments (Note: two different center pieces are supplied for the PT-10 bracket that will accommodate 20 degree increments with each center piece incremented by 10 degrees to allow for the 10 degree total pan and tilt adjustment.)

The Pole Mount Mini is also equipped with an M6 stainless steel eye bolt that will facilitate user supplied secondary safety rigging.

The Pole Mount Mini back plate is constructed from heavy gauge stainless steel and is designed for outdoor installations. The system is mounted to a pole using a stainless steel band and clamp system. The banding system and components are available from BAND-IT-IDEX Corporation. Details and sourcing information are available in the installation manual.

Installation of the Pole Mount System EX should only be attempted by experienced professionals with knowledge of mounting to pole structures.

## FEATURES AND BENEFITS

- **Mounts to rectangular and circular small format poles**
- **103IM and 106IM compatable**
- **High Weatherability resins and stainless steel construction**

# POLE MOUNT MINI™

ONE SYSTEMS®

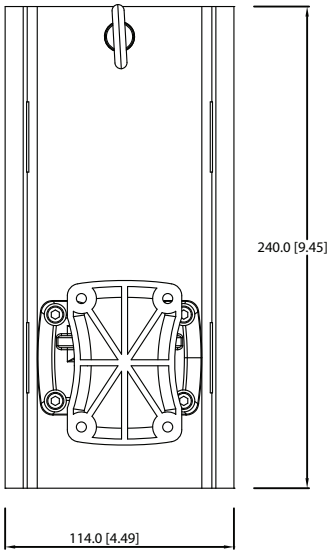


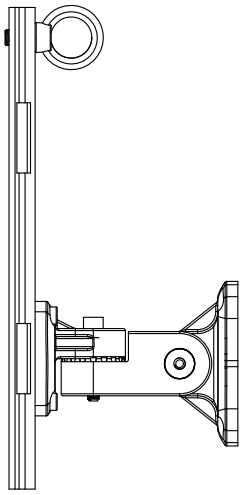

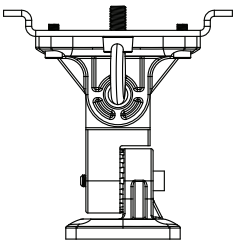

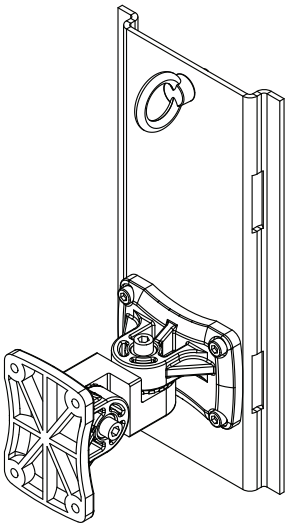

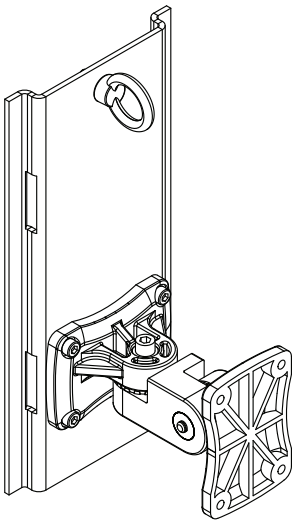



ONE SYSTEMS™

**ONE SYSTEMS**, Inc • 6204 Gardendale Drive • Nashville, Tennessee 37215
**ONE SYSTEMS** Global Co. Ltd. • 87/114 Modern Town 15th Floor • Sukhumvit 63 Ekkamai Soi 3
Klongtoey, Bangkok 10110 Thailand

# POLE MOUNT SYSTEM

ONE SYSTEMS®

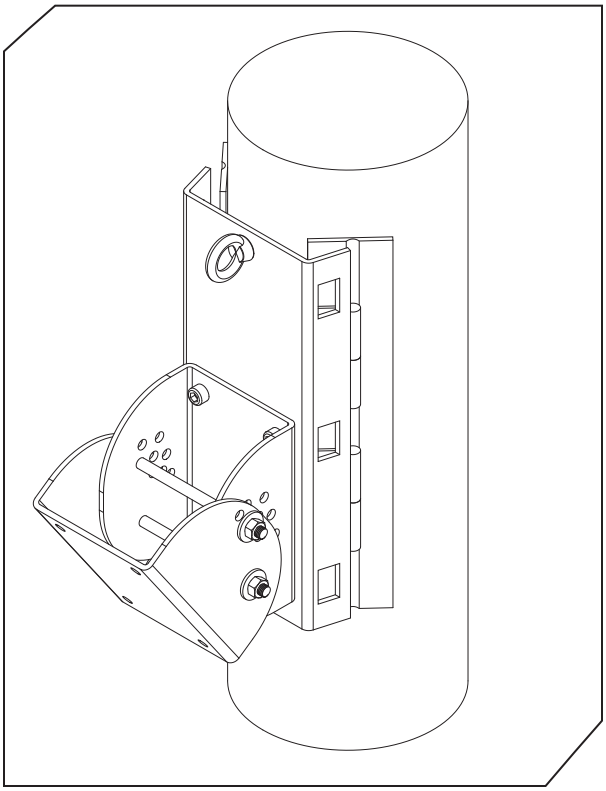

ONE SYSTEMS® offers a variety of mounting systems designed to provide enhanced flexibility to our loudspeaker systems. The Pole Mount System was designed to mount many of ONE SYSTEMS loudspeaker enclosures to a wide variety of pole diameters. Pole diameters from 8 inches (203mm) to 20 inches (508mm) may be used. (It is necessary to consult the pole manufacturer prior to installation to insure safe operating limits based on the pole construction, local wind patterns, and compliance with local and national codes).

The Pole Mount System is designed to be used with the ONE SYSTEMS 112IM™ and 212CIM™ loudspeaker enclosures. The system consists of a pole mounting bracket that includes a tilting function. The tilt function allows down tilt, in 5 degree increments, from 0 degrees to a maximum down tilt of 35 degrees.

The Pole Mount System also includes a safety assembly designed to also provide support for the system. The safety assembly, the Safety Link, consists of 8mm stainless steel quick links, an 8mm stainless steel turnbuckle assembly for “fine” adjustments, and links of 8mm stainless steel chain for “coarse” adjustments based on the specific degree of down tilt. The Safety Link must be used will all pole mount installations and whenever the Pole Mount System is used.

The Pole Mount System is constructed from heavy gauge stainless steel and is designed for outdoor installations. The system is mounted to a pole using a stainless steel band and clamp system. The banding system and components are available from BAND-IT-IDEX® Corporation. Details and sourcing information are available in the installation manual.

Mounting instructions may be found at www.ONESYSTEMS.com.The specific document is “Pole Mount System Mounting and Installation Instructions”. Installation of the Pole Mount System should only be attempted by experienced professionals with knowledge of mounting to pole structures.

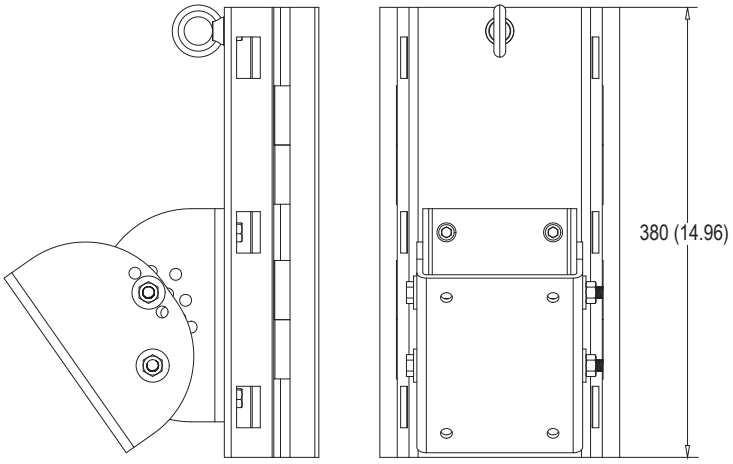


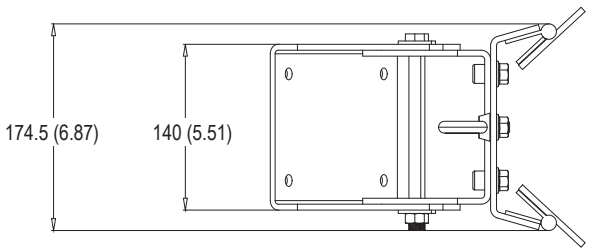

# POLE MOUNT SYSTEM

ONE SYSTEMS®

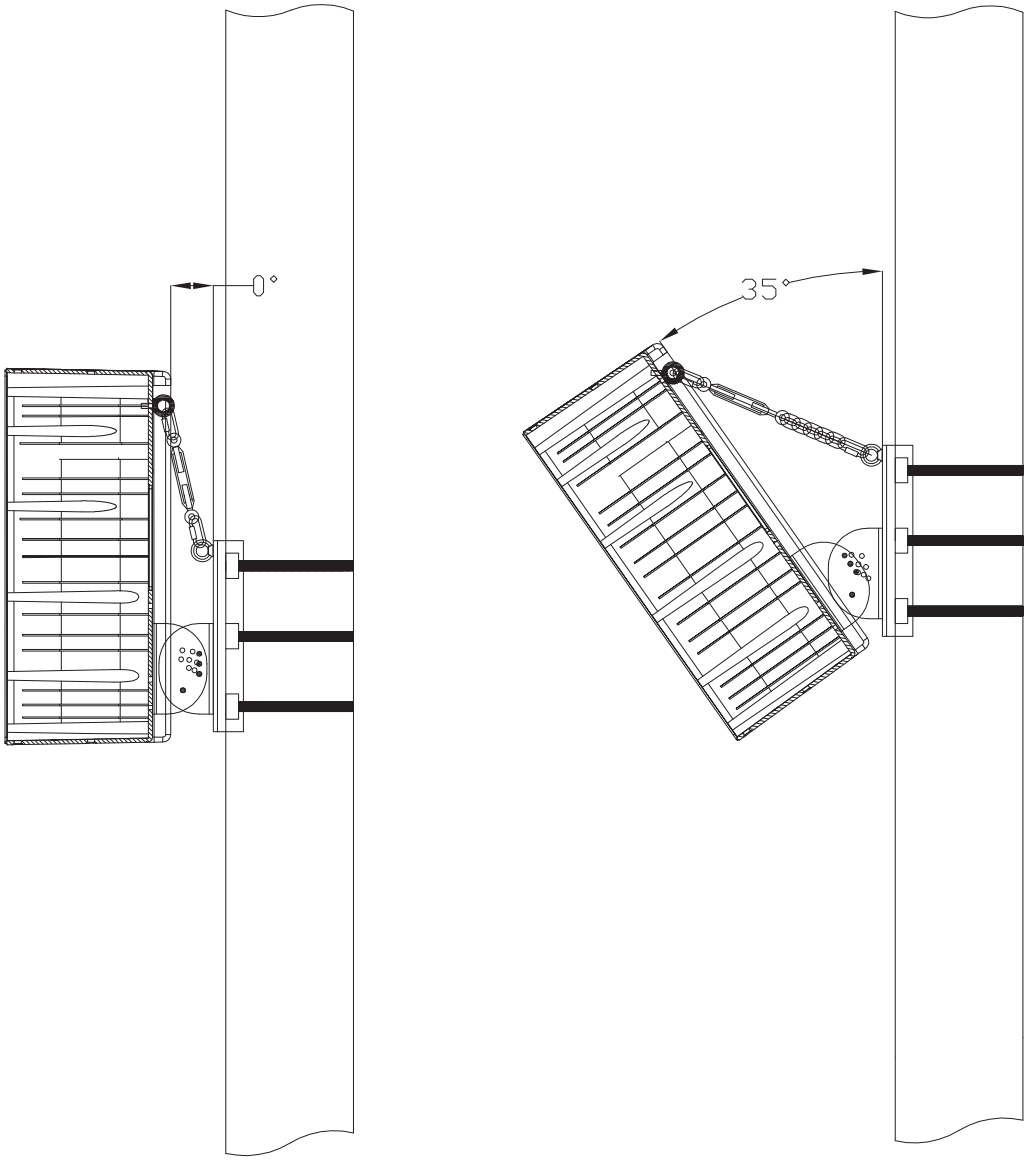


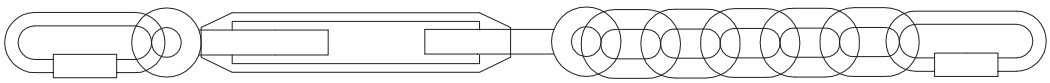

**ONE SYSTEMS** USA, Inc. • 6204 Gardendale Dr. • Nashville, TN 37215
**ONE SYSTEMS** Group - European Division • Mittelsmoorer Strasse 12 • 28879 Grasberg Germany
**ONE SYSTEMS** Global Co., Ltd. • 87/114 Modern Town 15th Floor • Sukhumvit 63 Ekkamai Soi 3
Klongtoey, Bangkok 10110 Thailand



ONE SYSTEMS®

# POLE MOUNT SYSTEM **EX**™

ONE SYSTEMS®

ONE SYSTEMS® offers a variety of mounting systems designed to provide enhanced flexibility to our loudspeaker systems. The Pole Mount System EX™ was designed to mount many of ONE SYSTEMS loudspeaker enclosures to a wide variety of pole diameters. Pole diameters from 8 inches (203mm) to 20 inches (508mm) may be used. It is necessary to consult the pole manufacturer prior to installation to insure safe operating limits based on the pole construction, local wind patterns, and compliance with local and national codes.

The Pole Mount System EX is designed to be used with the ONE SYSTEMS 212IM, 312CIM and Cross Field Array (CFA) loudspeaker enclosures. The system consists of a pole mounting bracket that includes a tilting function. The tilt function allows down tilt, in 5 degree increments, from 0 degrees to a maximum down tilt of 35 degrees.

The Pole Mount System EX also includes a safety assembly designed to provide support for the system. The safety assembly, the Safety Link, consists of 8mm stainless steel quick links, an 8mm stainless steel turnbuckle assembly for “fine” adjustments, and links of 8mm stainless steel for “coarse” adjustments based on the specific degree of down tilt. The Safety Link must be used will all pole mount installations and whenever the Pole Mount System EX is used.

The Pole Mount System EX is constructed from heavy gauge stainless steel and is designed for outdoor installations. The system is mounted to a pole using a stainless steel band and clamp system. The banding system and components are available from BAND-IT-IDEX® Corporation. Details and sourcing information are available in the installation manual.

Mounting instructions may be found at www.ONESYSTEMS.com.The specific document is “Pole Mount System EX Mounting and Installation Instructions”. Installation of the Pole Mount System EX should only be attempted by experienced professionals with knowledge of mounting to pole structures.

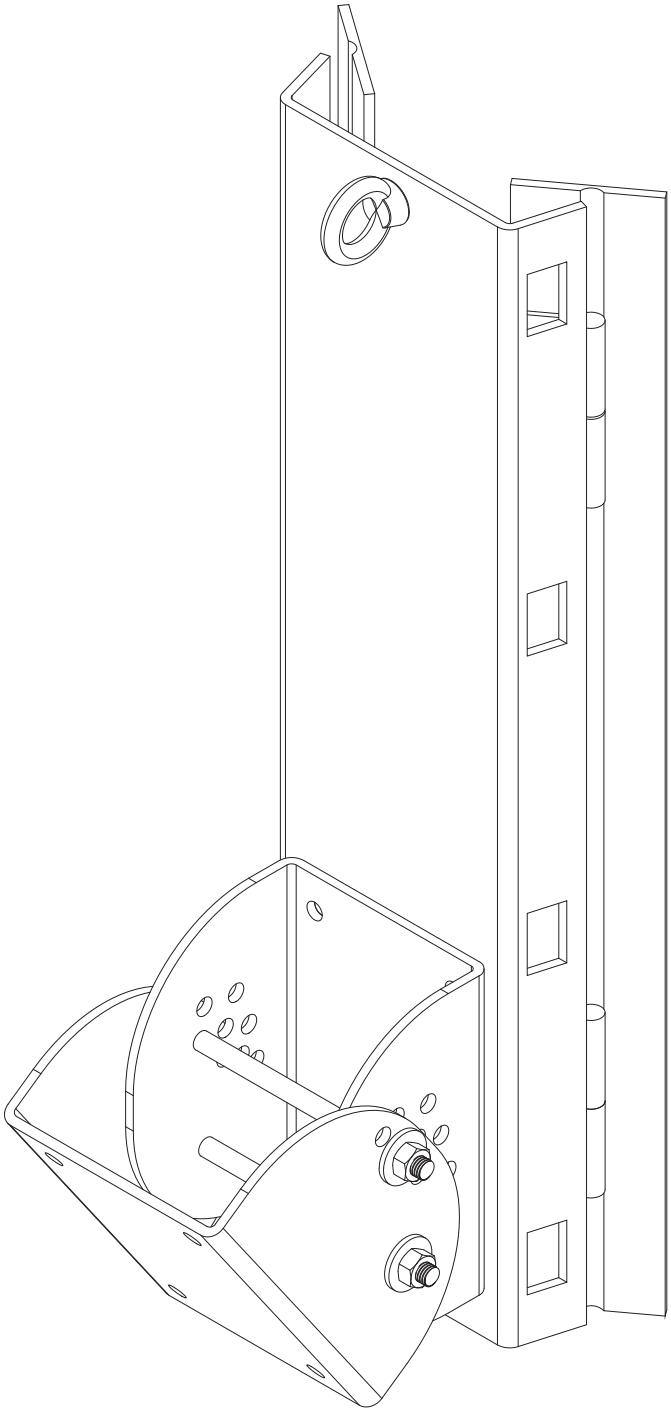

# POLE MOUNT SYSTEM **EX**™

ONE SYSTEMS®

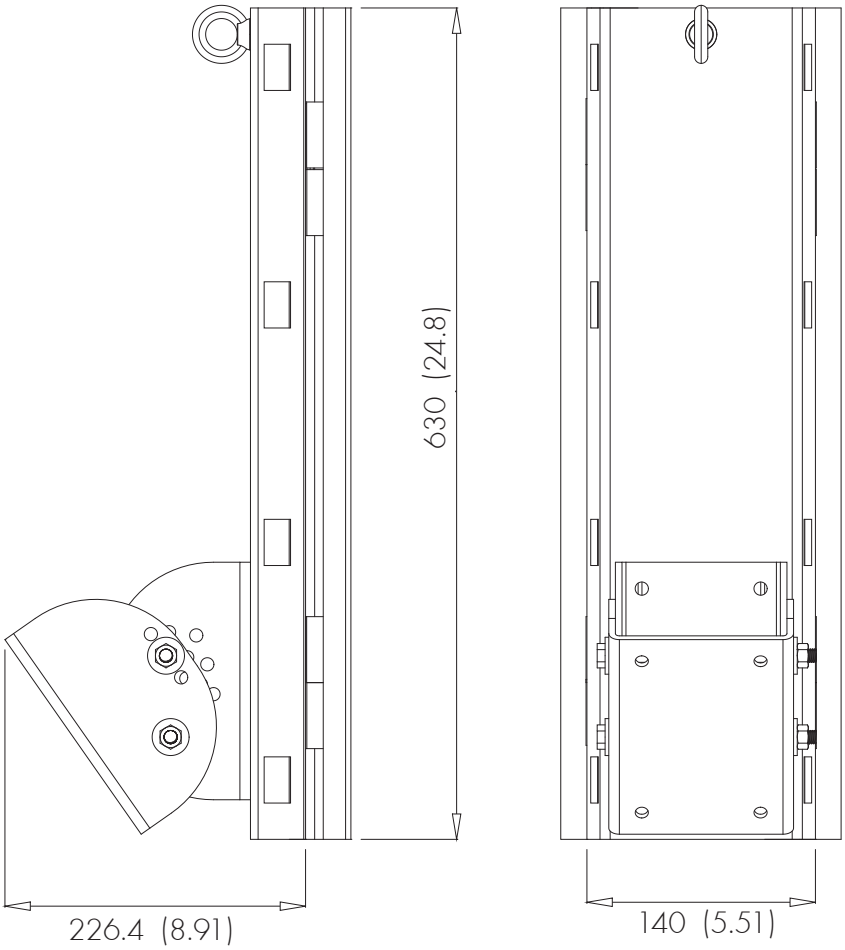


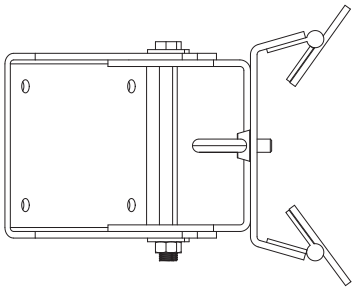

**ONE SYSTEMS** USA, Inc. • 6204 Gardendale Dr. • Nashville, TN 37215
**ONE SYSTEMS** Group - European Division • Mittelsmoorer Strasse 12 • 28879 Grasberg Germany
**ONE SYSTEMS** Global Co., Ltd. • 87/114 Modern Town 15th Floor • Sukhumvit 63 Ekkamai Soi 3
Klongtoey, Bangkok 10110 Thailand

ONE SYSTEMS®

# Pan and Tilt Bracket Installation

## PT-70-2, PT-35-2 and PT-10 **(Issued November 2009)**

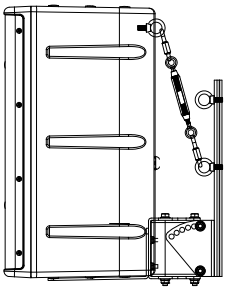

PT-35-2 with 108IM

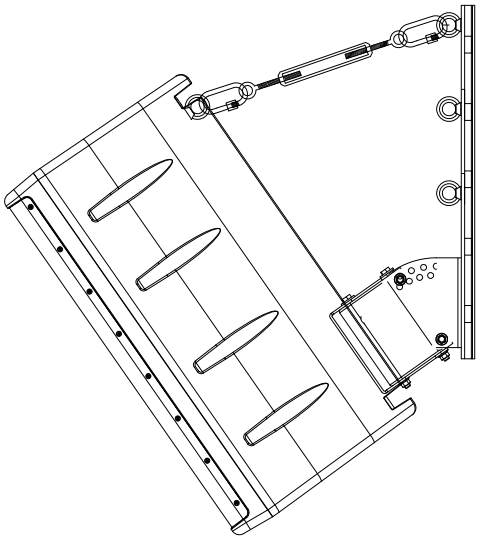

PT-70-2 with 112IM

The PT-70-2, PT-35-2 and PT-10 are easy to install and flexible systems designed to allow ONE SYSTEMS loudspeaker products to be mounted to wall and certain pole structures. The PT-10 instructions are found at the end of this document. The only products approved for use with the PT-70-2 and PT-35-2 includes the following:

**PT-70-2**
112IM
112IM-70
112IM-100
212CIM
212CIM-70
212CIM-100
212IM
212IM-70
212IM-100
312CIM
312CIM-70
312CIM-100
CFA
CFA-70
CFA-100
115TW

**PT-35-2**
108IM
108IM-70
108IM-100
208CIM
208CIM-70
208CIM-100

**PT-10**
103IM
103IM-70
103IM-100
106IM
106IM-70
106IM-100

**NOTE:** The 112UM is also compatible with the PT-70-2, but a user supplied stainless steel wire rope assembly is required in place of the Link assembly for 10 degrees or less down tilt. The wire rope diameter should be 3/32 inch (2.5mm) or larger.

**NO OTHER LOUDSPEAKERS SHOULD BE SUBSTITUTED!**

The following actions **MUST** be performed **PRIOR** to beginning the installation of the PT-70-2, PT-35-2 or PT-10:

1. This installation guide must be completely read and understood

2. The instruction manual ***"Rigging and Suspension of One Systems Products"*** must be read and understood. (This instruction manual is available with other technical papers at www.onesystems.com by clicking on the "Documentation" tab on the home page, then by clicking "Educational Papers"

3. The structure of the mating surface MUST be capable of supporting the combined weight of the pan and tilt bracket, the loudspeaker and all associated rigging; and must satisfy the required safety factors specified by local and national codes, as well as safe rigging practices.

4. The PT-70-2, PT-35-2 and PT-10 pan and tilt brackets should be installed only by someone experienced in the overhead suspension of items. They should be familiar with applicable local/national codes governing the installation of these types of products and those governing the attachment of these types of products to specific pole structures.

**CAUTION:** All structures outdoors are subjected to wind forces. These forces must be considered when suspending any product outdoors. It is necessary to know the "Effective Projected Area" (EPA) of the loudspeaker prior to installation of the loudspeaker and the PT-70-2, PT-35-2 or PT-10. See Appendix 1 of this installation manual for effective projected areas for each enclosure rated for use with the PT-70-2, PT-35-2 and PT-10.

# INSTALLATION

## NOTE: See separate instructions for the PT-10 later in this document

The PT-70-2 and PT-35-2 consist of three parts: the wall bracket, the loudspeaker bracket, and the Link. The PT-70-2 wall bracket and loudspeaker bracket are shown in Figure 1. Figure 1a shows the wall bracket portion of the PT-70-2. The PT-70-2 bracket allows the loudspeaker to be oriented from a 0 degree down tilt to a maximum down tilt of 35 degrees in 5 degrees increments. The PT-35-2 allows a down tilt of 40 degrees in 8 degree increments.

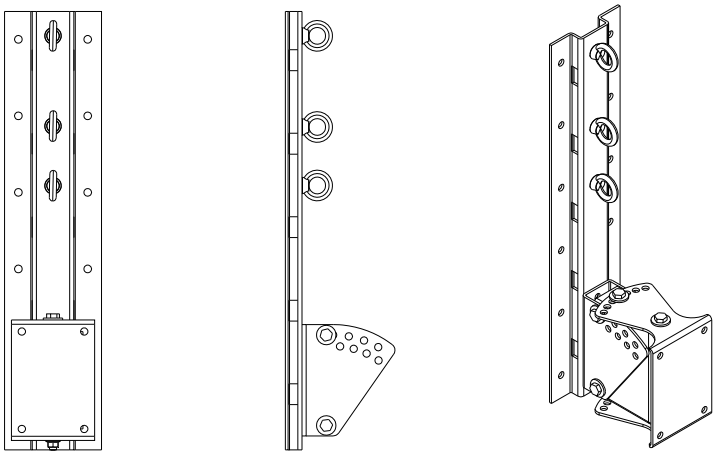

Figure 1

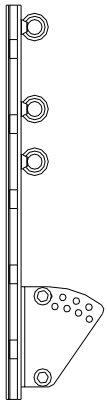

Figure 1a

The PT-35-2 wall bracket and loudspeaker bracket are shown in Figure 2.

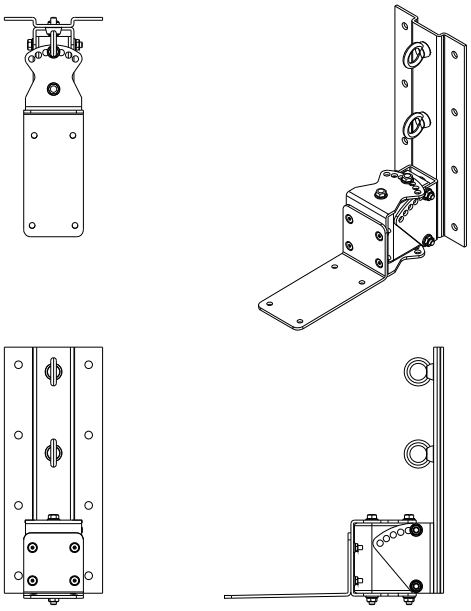

Figure 2

Prior to mounting the wall bracket to the wall the speaker mount section should be removed. See Figures 2a and 2b.

NOTE: The M10 bolts associated with the “pan” axis should be left in place, as shown in both Figures 2a and 2b.

The wall bracket section should now be mounted to the wall surface. The PT-70-2 has 12 mounting holes and the PT-35-2 has 8 mounting holes for allowing fasteners to join the bracket and loudspeaker assembly to the mating surface.

IT IS NECESSARY TO USE ALL MOUNTING HOLES TO INSURE A SAFE AND SECURE MATE TO THE ASSOCIATED SURFACE! (12 for the PT-70-2 and 8 for the PT-35-2)

All fasteners associated with the mounting of the Pan and Tilt bracket and loudspeaker assembly to the mating surface are the responsibility of others. The design and structural capacity of mating surfaces (such as walls) vary greatly and specific fasteners are designed for use with specific mating surfaces. One Systems does not recommend any mating fasteners and strongly urges the installer to consult with one experienced in suspension of products from the specific mating surfaces and the appropriate choice of fasteners for those specific surfaces.

The wall bracket section should be secured firmly to the mating surface using the appropriate fastening system. The fastening system should be determined by the structure of the mating surface.

IT IS CRITICAL THAT THE MATING SURFACE BE CAPABLE OF SUPPORTING THE LOAD OF THE PT BRACKET, THE LOUDSPEAKER AND ALL SUSPENSION HARDWARE, AS WELL AS PROVIDING THE PROPER SAFETY FACTORS. DO NOT ATTEMPT TO SUSPEND THE BRACKET AND LOUDSPEAKER UNTIL THE STRUCTURAL CHARACTERISTICS OF THE MATING SURFACE ARE UNDERSTOOD. DO NOT INSTALL THE PT BRACKET AND LOUDSPEAKER IF THE MATING SURFACE IS NOT CAPABLE OF SUPPORTING THE ENTIRE ASSEMBLY WEIGHT, AS WELL AS PROVIDING THE REQUIRED SAFETY FACTORS!

After the PT wall section of the bracket is securely mounted to the mating surface, the loudspeaker section should be mounted to the loudspeaker using the fasteners supplied. (DO NOT SUBSTITUTE FASTENERS) The loudspeaker mount section of each bracket is shown in figures 2a and 2b.

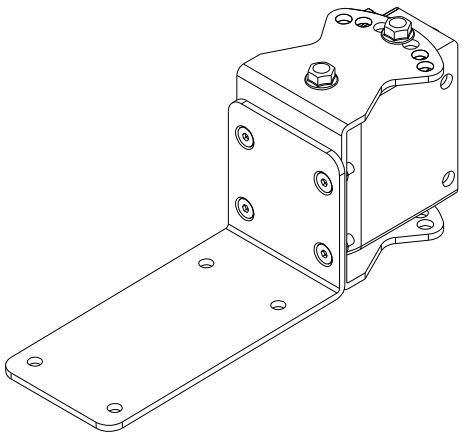

Figure 2a PT-35-2 speaker mount bracket

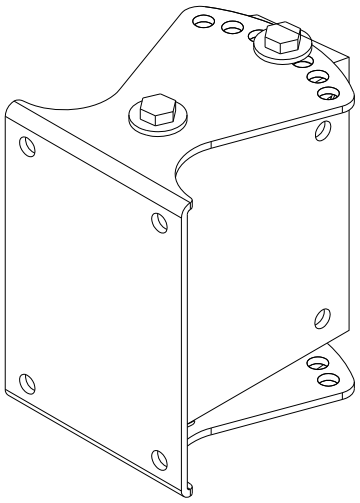

Figure 2b PT-70-2 speaker mount bracket

The PT-70-2 mounts to the rear of ALL IM series enclosures, except for the 108IM and 208CIM, using the 140mm x 90mm M10 locations as shown in figure 2c. The PT-35-2 mounts to the top or bottom of the 108IM or 208CIM as shown in figure 2c using the M8 locations. The mounting locations are highlighted in red.

**DO NOT SUBSTITUTE MOUNTING LOCATIONS!**

NOTE: There are 8 each hex head M10 bolts supplied in the mounting kit of the PT-70-2. When mounting the 115TW, 112UM and 115UM (wood) enclosures to the PT-70-2 use 4 each of the 45mm (longer) M10 bolts. The 4 shorter M10 bolts are used for the IM series injection molded enclosures.

Additionally, there are forged shoulder eyebolts supplied in the PT kits, 2 each M10 eyebolts for the PT-70-2 and 1 each M8 eyebolt for the PT-35-2. One of these eyebolts must be installed in the top, rear portion of the enclosure. When installing the PT-70-2, use the longer of the two M10 eyebolts for wood enclosures and the shorter of the two M10 eyebolts for the IM series enclosures. Make sure that the eyebolt is seated on the surface of the enclosure.

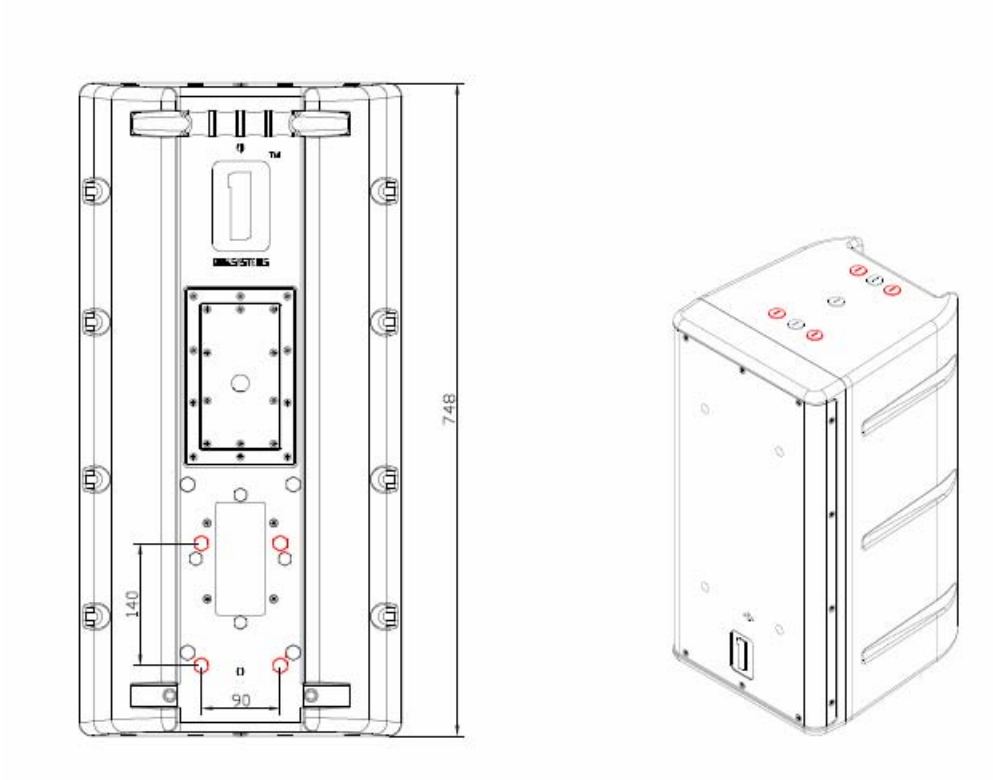


Figure 2c

The loudspeaker and loudspeaker section of the bracket may now be joined to the wall section and the required pan and tilt angles selected. This is a two person job and extreme care should be exercised to avoid serious injury.

The M10 tilt pivot bolt should be inserted first and secured but not completely tightened using the nylon insert M10 nuts supplied. The tilt pivot bolt is shown below in Figure 2d. Then the M10 tilt aiming bolt should be inserted and nylon insert nuts applied. Then the tilt axis bolts should be tightened.

CAUTION: DO NOT REMOVE THE PAN PIVOT BOLT

Next the pan angle may be adjusted by removing the M10 pan aiming bolt, but NOT the pan pivot bolt, and setting the desired pan angle and then re inserting the M10 bolt.

Once both the tilt and pan angles are set, make sure that all bolts are tight and secure.

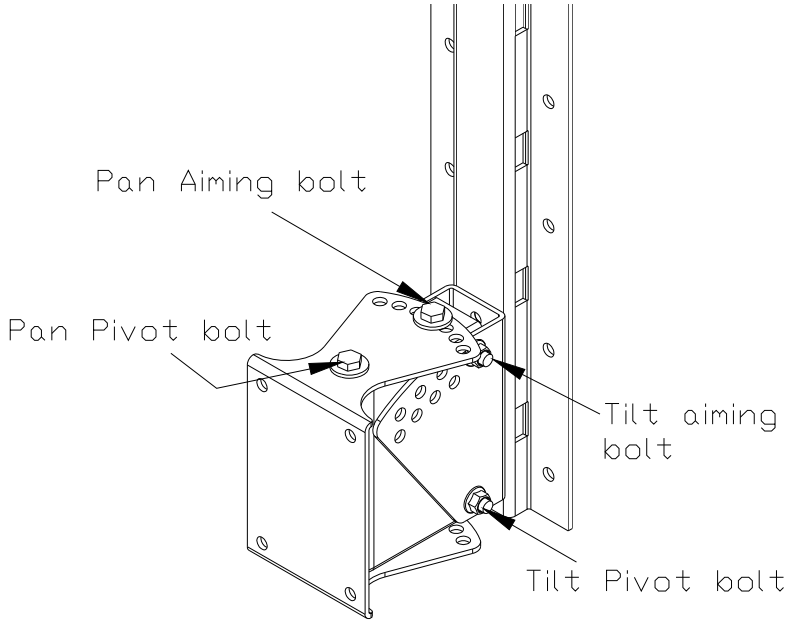


Figure 2d

INSTALLING THE LINK

Figure 3 is a representation of the Link assembly. This assembly MUST be used whenever the PT-70-2 or PT-35-2 is being used. Each pan and tilt bracket is supplied with a link assembly. (The 112UM does NOT use the Link and requires a user supplied wire rope assembly in place of the LINK!)

SEE SECTION 5 OF THIS MANUAL FOR DETAILS ON THE PROPER MOUNTING OF THE LINK ASSEMBLY!

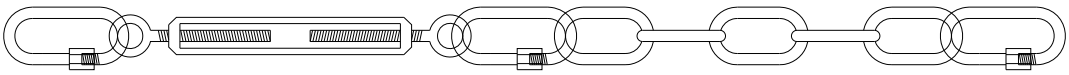

Figure 3

POLE MOUNTING THE WITH THE PT-70 AND PT-35

Prior to mounting the wall bracket to the pole the speaker mount section should be removed. (See Figures 2a and 2b)

NOTE: The M10 bolts associated with the “pan” axis should be left in place, as shown in both Figures 2a and 2b.

CAUTION: DO NOT REMOVE THE PAN PIVOT BOLT

The PT-70-2 and PT-35-2 also have slots cut in the wall mount section of the bracket that allow the brackets to be pole mounted. The pole mount section requires that BAND-IT brand stainless steel bands be used.

For the PT-70-2, rectangular poles must have a flat mounting surface of at least 5.5 inches (140mm) for mounting. Circular poles must have a diameter of at least 8 inches (203mm).

For the PT-35-2, rectangular poles must have a flat mounting surface of at least 5.5 inches (140)mm. Circular poles must have a diameter of at least 4 inches (101)mm.

IMPORTANT: Figure 4 shows the PT-70-2 with slots visible. The slots are shown in red. There are 5 slots and ALL 5 slots must be utilized for secure mounting to a pole. Each of the 5 slots must use double wrapped BAND-IT bands as described in step 1 below.

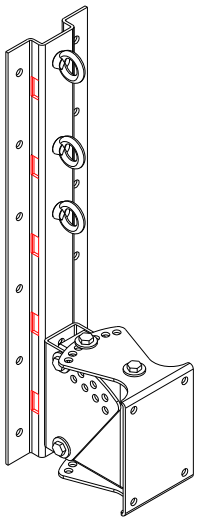

Figure 4

Figure 5 shows the PT-35-2 with slots visible.

IMPORTANT: There are 3 slots, shown in red. Each of the 3 slots must be utilized to insure a secure mount to a pole. ALL 3 slots must use double wrapped bands!

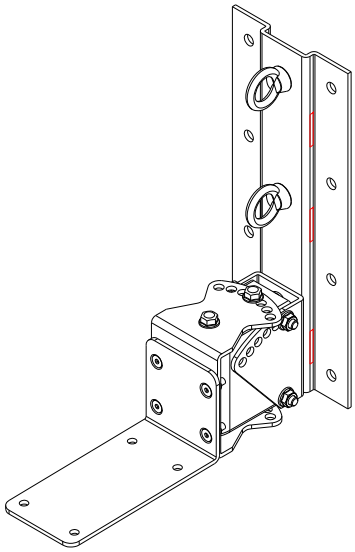

Figure 5

1. Mount the wall bracket section (see figure 1a) of the bracket to the pole at the desired height on the pole. The bracket is mounted to the pole using BAND-IT stainless steel bands. DO NOT SUSTITUTE bands of other material or other widths! There are five locations on the pole bracket for bands. ALL 5 LOCATIONS MUST BE USED on the PT-70-2. There are 3 locations for the PT-35-2 and ALL 3 slots MUST BE USED. Figure 6 below illustrates the locations for the stainless steel band clamps.(PT-70 is shown)

   It is REQUIRED that ALL bands be DOUBLE wrapped. Double wrapping will insure a strong and secure mounting of the bracket to the pole. The stainless steel banding materials should be as follows:

   BAND-IT # C206R9 stainless steel bands
   BAND-IT # C25699 buckles
   BAND-IT # C00169 tensioning tool

   The stainless steel band is Type 201SS 0.030 inches (0.762mm) thick and 0.750 inches (19mm) wide.

   WARNING: Do NOT substitute banding materials or banding dimensions.

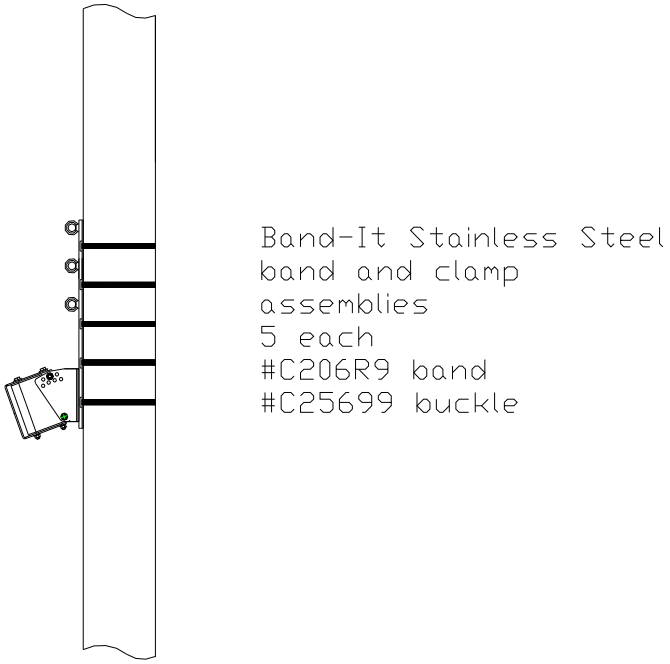


Figure 6
PT-70-2 bracket shown

Installation instructions from BAND-IT should be followed exactly. Operating instructions are supplied with the tensioning tool. (All BAND-IT parts and tools purchased separately. These parts and tools are not supplied by ONE SYSTEMS)

The stainless steel banding materials, buckles and tensioning tools are available from the following locations (or though distributors recommended by these locations):

BAND-IT IDEX, Inc.
4799 Dahlia St.
Denver Colorado 80216
USA
1-800-525-0758

P&C Industrial Supplies
1-800-922-9291
(P&C is an authorized U.S.A. Distributor for Band-It Products)

FELIX PONCE
Calle Ignacio Zaragonza No. 8
Colonia Ahuehuetes Atizapan 52953
Edo. de Mexico
(52) 555825 8502

BAND-IT Company Limited
Speedwell Industrial Estate

Stavely, Nr. Chesterfield
Derbyshire, S43 3PF England
Home Sales (44) 1246-479479
Export Sales (44) 1246 479480

BAND-IT Clamps (ASIA) Pte. Ltd.
11 Second Chin Bee Road
Singapore 618777
65-62658853

BAND-IT Shanghai Sales Office
207 room
Wanbao International Business Centre
660# Xinhua Road
Shanghai, China 200052
021-62826348-308

2. Next, the loudspeaker bracket should be mounted to the loudspeaker using the supplied M10 (M8 for the 108IM and 208CIM) stainless steel bolts and internal tooth lock washers. DO NOT SUBSTITUE ANY PARTS

3. Now the M10 (M8 for 108IM and 208CIM) forged shoulder “eye” bolt should be installed in the top rear of the loudspeaker enclosure. Make sure that that eyebolt is seated on the enclosure surface.

NOTE: There two (2) forged shoulder eye bolts included. One has a 17mm threaded section and the second has a 40mm threaded section. Use the 17mm threaded section eye bolt for the 112IM, 212CIM, 212IM, 312CIM and CFA enclosures. Use the 40mm threaded section for the 115TW, 112UM, and 115UM wood enclosures.

4. The loudspeaker may now be placed on the pole bracket.

**USE EXTREME CAUTION!** The loudspeaker is heavy and it is likely that the desired mounting location is high in the air. This process should never be attempted by a single person.

TWO PEOPLE ARE REQUIRED TO MOUNT THE LOUDSPEAKER ENCLOSURE TO THE WALL, POLE AND PT bracket. Safety harnesses should always be worn when working from an elevated platform.

CAUTION: DO NOT REMOVE THE PAN PIVOT BOLT (See Figure 2d)

The M10 tilt pivot bolt should be inserted first and secured but not completely tightened using the nylon insert M10 nut supplied. The tilt pivot bolt is shown below in Figure 2d. Then the M10 tilt aiming bolt should be inserted and nylon insert nuts applied. Then the tilt axis bolts should be tightened.

Next the pan angle may be adjusted by removing the M10 pan aiming bolt, but NOT the pan pivot bolt, and setting the desired pan angle and then re inserting the M10 bolt.

Once both the tilt and pan angles are set, make sure that all bolts are tight and secure.

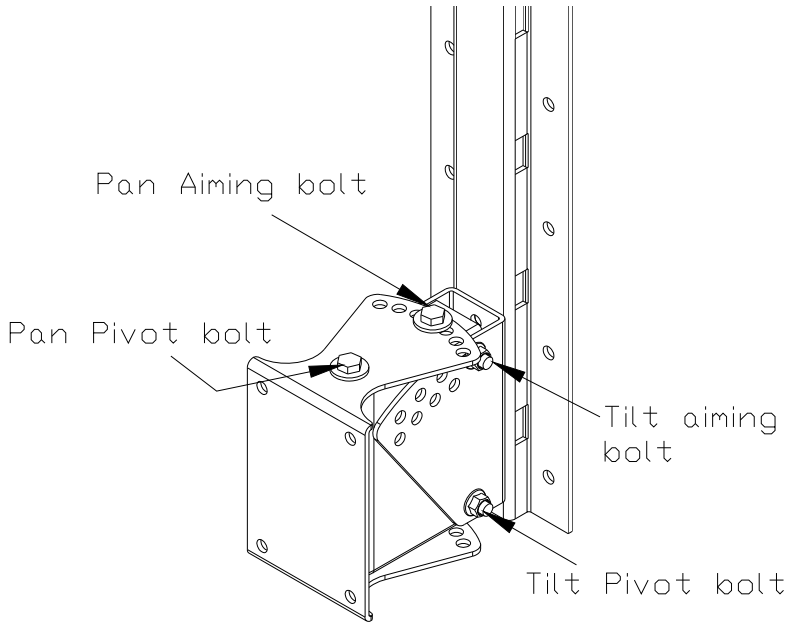


UNDER NO CIRCUMSTANCES SHOULD THE LOUDSPEAKER DOWN TILT EXCEED 35 DEGREES FROM VERTICAL FOR THE PT-70-2 (40 DEGREES FOR THE PT-35-2).

## SECTION 5 LINK ASSEMBLY

5. Now the Link must be installed.

INSTALLING the Pan and Tilt Brackets WITHOUT THE LINK IS NOT ALLOWED!
NOTE: The 112UM does not use the Link assembly for down tilt angles of 10 degrees or less from vertical. A user supplied wire rope assembly is required in place of the Link!

The Link (see figure 3) consists of stainless steel quick links, a stainless steel turnbuckle, and several links of stainless steel chain. The use of the chain pieces and quick links with the turnbuckle is based on the tilt angle of the enclosure. The turnbuckle should always be used.

DO NOT SUBSTITUTE ANY PART OF THIS LINK ASSEMBLY!

The Link should be tightened by rotating the turnbuckle until there is tension on the Link assembly. Do not over tighten. The purpose of the Link is to provide support for the main Pole Mount System tilting bracket at the bottom of the assembly.

The back plate sections of the PT-70-2 and PT-35-2 have eyebolts attached to them. There are 3 eyebolts on the back plate section of the PT-70-2 and 2 eyebolts on the back plate section of the PT-35-2. Figure 7 below illustrates which eyebolt should be used for each down tilt angle.

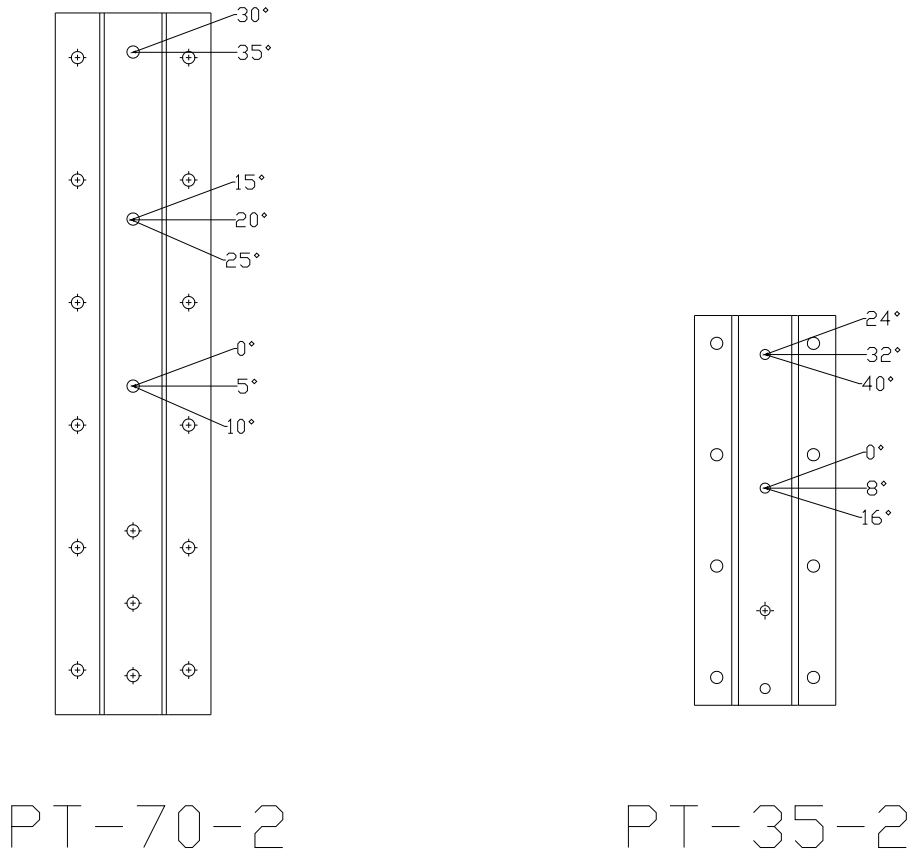


Figure 7

Make sure to use the appropriate combination of Link parts to insure proper connection between the Pole Mount System and the specific One Systems enclosure. The required combination of Link parts is determined by the down tilt angle of the enclosure.

The assembly may be configured with any combination of turnbuckle, chain link sections and quick link in order to achieve the proper tension on the system, but the turnbuckle must always be used. Figures 8a, 8b, and 8c show a 108IM and PT-35-2 at vertical, 24 degrees and 40 degrees using the eyebolt positions shown in Figure 7. Note that Figures 8a and 8b below use the same link and turnbuckle combination, but different eyebolt locations. Figure 8c below uses chain sections, as well as the quick links and the turnbuckle.

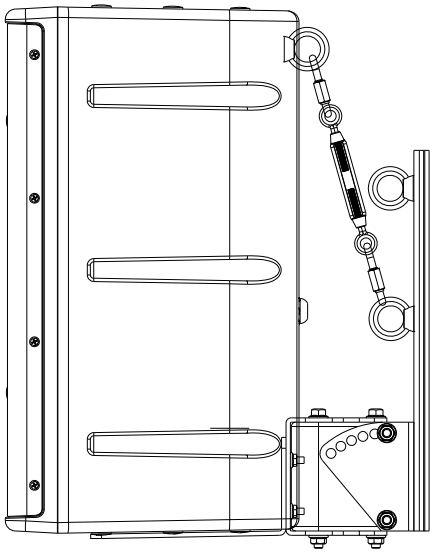

Figure 8a

Figure 8a represents the Link assembly with the enclosure in a vertical orientation and the Link using the lower eyebolt position.

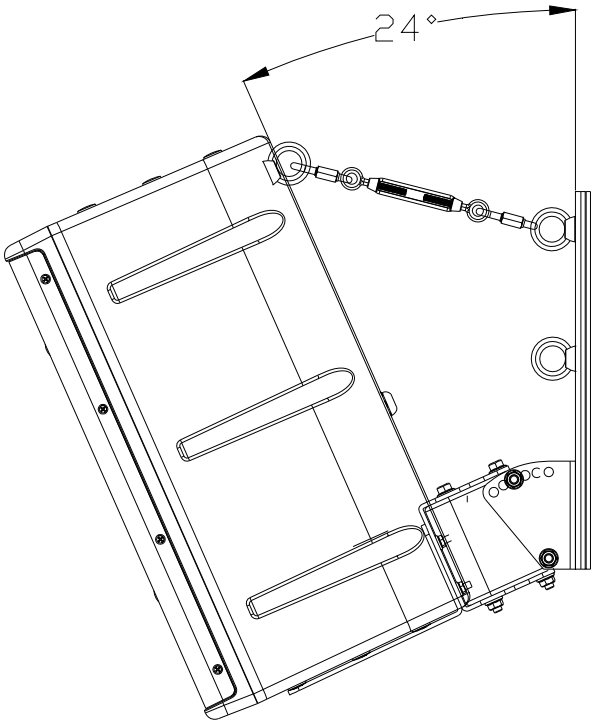


Figure 8b

Figure 8b above represents the Link with the enclosure in a 24 degree tilt. The Link is using the top eyebolt and the turnbuckle has been adjusted to provide mild tension.

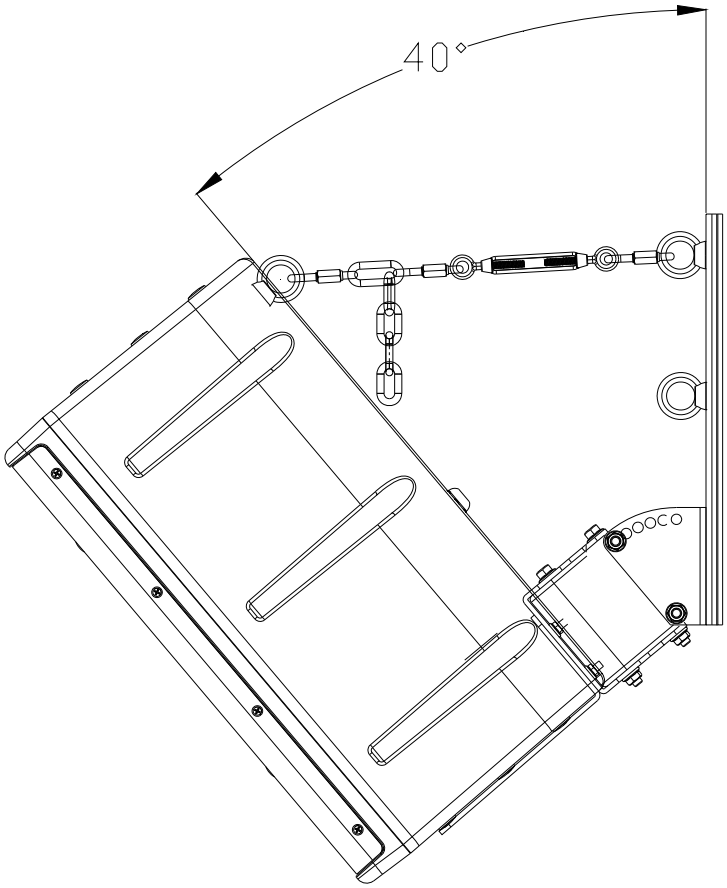


Figure 8c

Figure 8c above represents the Link assembly with the enclosure in a 40 degree tilt. The Link assembly uses the top eyebolt and the stainless steel chain has been added to achieve the proper tension on the assembly. Notice the “dropped” chain links in Figure 8c.

Warning, if the turnbuckle assembly is turned and the loudspeaker enclosure angle begins to change (if the down tilt angle begins to move toward 0 degrees vertical then the turnbuckle has been OVER TIGHTENED. Turn the turnbuckle until the down tilt angle is set by the M10 thru bolt on the pole bracket.

Figure 9 below shows a 312CIM mounted to a PT-70-2. The down tilt is 35 degrees so the top eyebolt is utilized as per Figure 7.

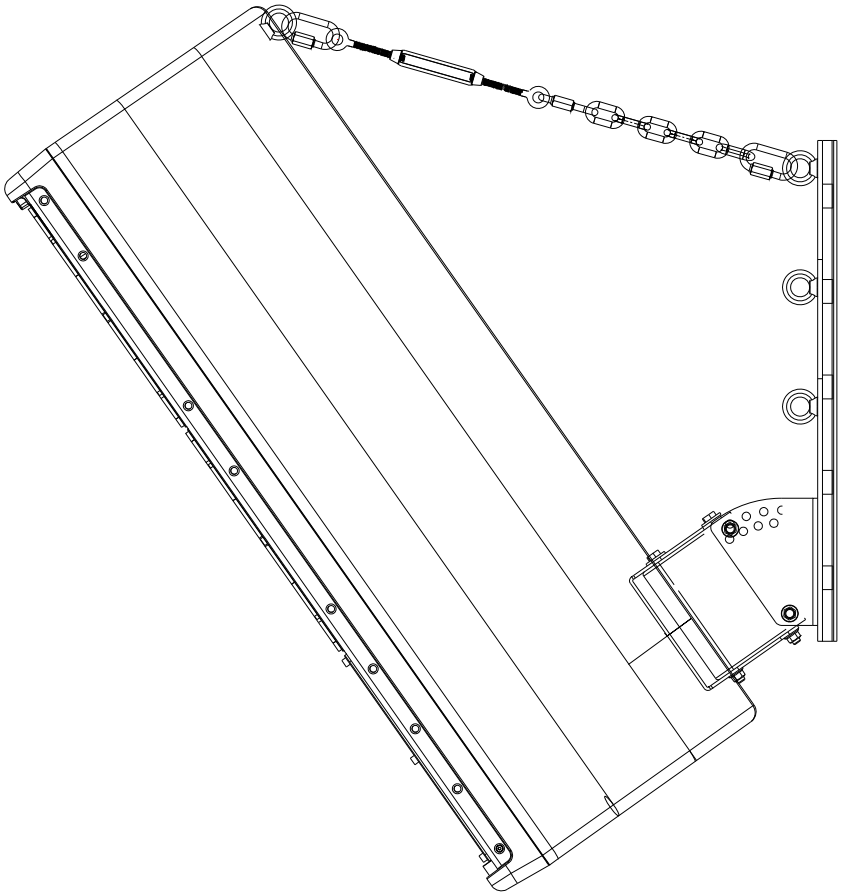

Figure 9

Figure 9 above represents the maximum down tilt angle of 35 degrees from vertical. Note that because the down tilt angle is 35 degrees the top eyebolt has been used, again per Figure 7.

Figure 10 below is a close up view of the Link assembly. Certain down tilt angles may require a link to be “dropped” from the chain as shown below. The lower quick link is positioned in various chain segments based on the desired degree of down tilt. The turnbuckle should be adjusted, as described in this section

In any position, the turnbuckle must be adjusted to allow the proper amount of tension on the Link. The Link should never pull the loudspeaker up towards vertical. The Link may be configured with or without the chain section and quick link depending on the down tilt angle of the enclosure.

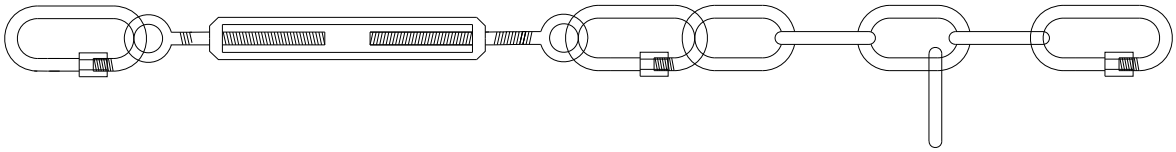

Figure 10

Secondary safety cables are STRONGLY recommended and should be secured to a structural point NOT associated with the PT bracket or loudspeaker.

## PT-10 Installation

The One Systems PT-10 is designed for use with the 103IM and 106IM family of One Systems products only.

**DO NOT SUBSTITUTE OTHER LOUDSPEAKER ENCLOSURES!**

The PT-10 has been designed as a low cost yet flexible pan and tilt system and is intended for use with small format, low Q loudspeaker systems. The PT-10 offers 10 degree aiming increments and will provide up to 5 steps within the nominal 100 degree pattern of either the 103IM or the 106IM.  Figure 11 below represents the PT-10 pan and tilt bracket.

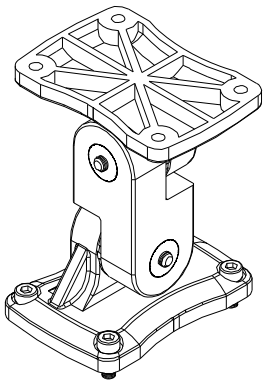

Figure 11

There are two center pieces that may be used for aiming with the PT-10 bracket. Each “center piece” offers aiming resolution of 20 degrees but substitution of the center pieces will yield aiming resolution of 10 degrees.

Figure 12a below shows the two center pieces. The 10 degree aiming resolution is achieved by substituting the appropriate center piece to achieve a TOTAL resolution of 10 degrees between the two center pieces. These two center pieces are interchangeable and may be used to set the desired angles.

Note the “rotated clock” section in “Part 2” of Figure 11a below. This section is rotated 10 degrees from the part labeled “Part 1” and is what allows the aiming increments to be adjusted in 10 degrees steps.

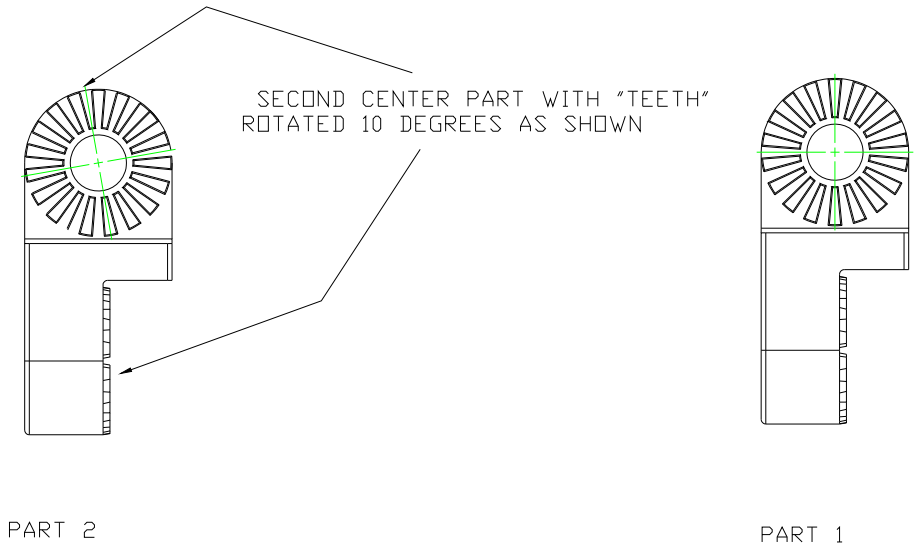


FIGURE 11a

Figure 12 below shows a One Systems 103IM mounted to a PT10. There are four (4) M5 stainless steel bolts that are supplied with the PT-10 for mounting to either the 103IM or the 106IM. Once the PT-10 is mounted to the specific loudspeaker enclosure the two stainless steel bolts on the center piece of the PT-10 may be loosened to allow the bracket to be rotated in both the “pan” and “tilt” axis. Once proper loudspeaker aiming is achieved both of these bolts must be securely fastened to insure the assembly will not move.

**NOTE:** It is strongly recommended that a “temporary” thread locker be used to secure the two M6 bolts that set both the pan and the tilt angles of the PT-10.
**NOTE:** Security bolts are available from One Systems for use in place of both the M5 and M6 bolts that are supplied with the PT-10

It is necessary to fit an additional safety assembly between the loudspeaker enclosure and the mounting surface. **This safety assembly is not supplied by One Systems**. The safety assembly must conform to local and national codes.

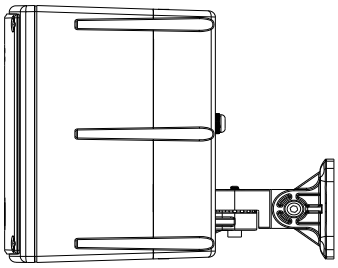

Figure 12

Secondary safety cables are STRONGLY recommended and should be secured to a structural point NOT associated with the PT bracket or loudspeaker.

## APPENDIX 1
## (Projected Area Values)

The values below should be supplied to the specific pole manufacturer for safety calculations. These values were determined by adding the projected areas of the high frequency horns, the woofer cones and ports to the cross sectional area of the front of each enclosure listed below.

103IM …… 67 in^2 (43,000mm^2)

106IM…… 136 in^2 (88,000mm^2)

108IM……..…250 in^2 (161,290mm^2)
(60x40 HF horn)

208CIM…… 207 in^2 (133,550mm^2)

112IM …….. 600 in^2 (387,096 mm^2)
(60x40 HF horn)

212CIM…… 600 in^2 (387,096mm^2)

212IM …….. 804 in^2 (550,000 mm^2)

312CIM…… 804 in^2 (550,000mm^2)

Cross Field Array…….. 2,708in^2 (1,750,000mm^2)

# Pan and Tilt Brackets

## PT-70, PT-35 and PT-10 INSTALLATION
## (Issued April 2009)

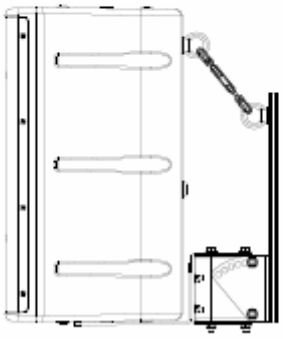

PT-35 with 108IM

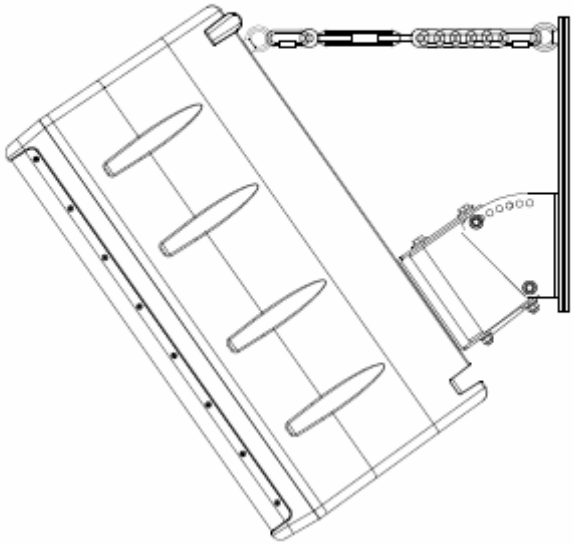

PT-70 with 112IM

The PT-70 and PT-35 are easy to install and flexible systems designed to allow ONE SYSTEMS loudspeaker products to be mounted to wall and certain pole structures. The only products approved for use with the PT-70 and PT-35 include the following:

| **PT-70** | **PT-35** |
|---|---|
| 112IM | 108IM |
| 112IM-70 | 108IM-70 |
| 112IM-100 | 108IM-100 |
| 112UM | 208CIM |
| 212CIM | 208CIM-70 |

212CIM-70
212CIM-100
212IM
212IM-70
212IM-100
312CIM
312CIM-70
312CIM-100
CFA
CFA-70
CFA-100
115TW
115TW-70
115TW-100

208CIM-100

**PT-10**
103IM
103IM-70
103IM-100
106IM
106IM-70
106IM-100

**NO OTHER LOUDSPEAKERS SHOULD BE SUBSTITUTED!**

The following actions MUST be performed PRIOR to beginning the installation of the PT-70, PT-35 or PT-10:

1. This installation guide must be completely read and understood

2. The instruction manual "Rigging and Suspension of ONE SYSTEMS Products" must be read and understood. (this instruction manual is available along with other technical papers at www.onesystems.com under the "Education" tab

3. The structure of the mating surface MUST be capable of supporting the combined weight of the pan and tilt bracket, the loudspeaker and all associated rigging; and must satisfy the required safety factors specified by local and national codes, as well as safe rigging practices.

4. The PT-70, PT-35 and PT-10 pan and tilt brackets should be installed only by someone experienced in the overhead suspension of items. They should be familiar with applicable local/national codes governing the installation of these types of products and those governing the attachment of these types of products to specific pole structures.

**CAUTION:** All structures outdoors are subjected to wind forces. These forces must be considered when suspending any product outdoors. It is necessary to know the "Effective Projected Area" (EPA) of the loudspeaker prior to installation of the loudspeaker and the PT-70, PT-35 or PT-10. See Appendix 1 of this installation manual for effective projected areas for each enclosure rated for use with the PT-70, PT-35 and PT-10.

# INSTALLATION

## NOTE: See separate instructions below for the PT-10 (pg 18)

The PT-70 and PT-35 consist of three parts: the wall bracket, the loudspeaker bracket, and the Safety Link. The PT-70 wall bracket and loudspeaker bracket are shown in Figure 1. Figure 1a shows the wall bracket portion of both the PT-70 and the PT-35. The PT-70 bracket allows the loudspeaker to be oriented from a 0 degree down tilt to a maximum down tilt of 30 degrees and the PT-35 allows a down tilt of 25 degrees.

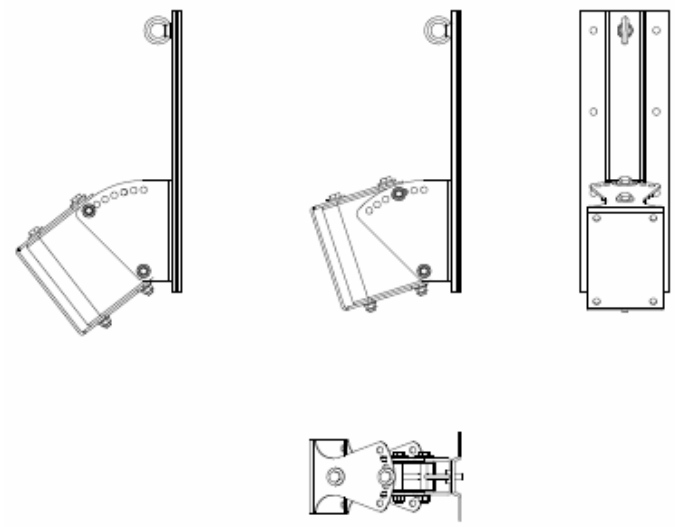

Figure 1

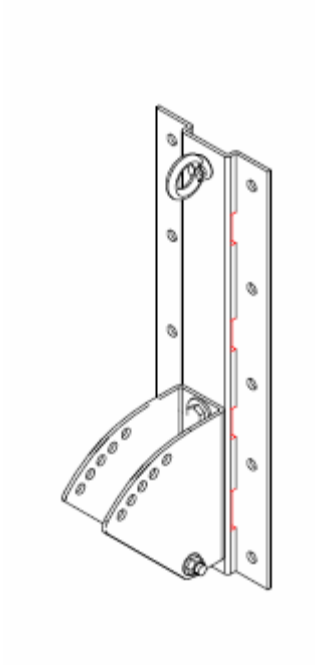

Figure 1a

The PT-35 wall bracket and loudspeaker bracket are shown in Figure 2.

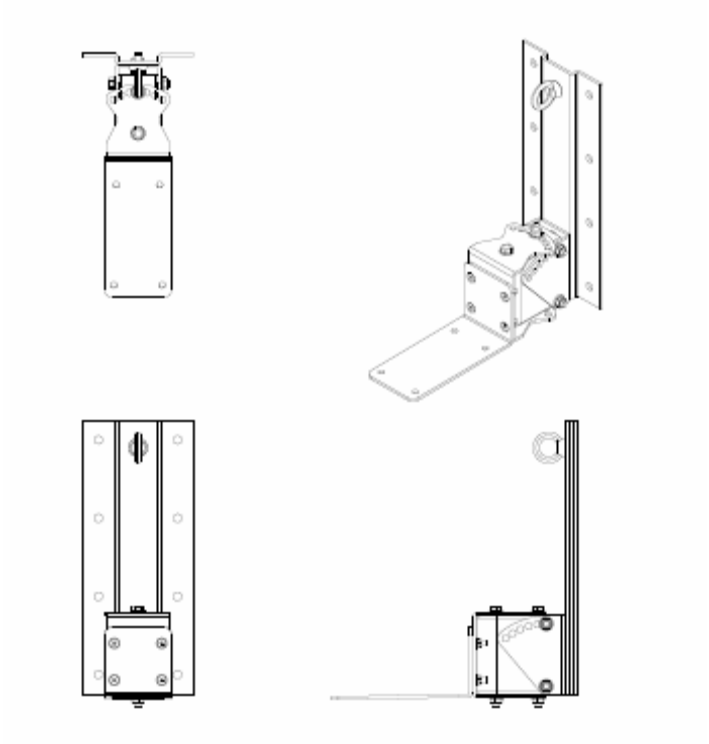

Figure 2

The wall bracket section should now be mounted to the wall surface. The PT-70 has 10 mounting holes and the PT-35 has 8 mounting holes for allowing fasteners to join the bracket and loudspeaker assembly to the mating surface.

IT IS NECESSARY TO USE ALL MOUNTING HOLES TO INSURE A SAFE AND SECURE MATE TO THE ASSOCIATED SURFACE! (10 for the PT-70 and 8 for the PT-35)

All fasteners associated with the mounting of the Pan and Tilt bracket and loudspeaker assembly to the mating surface are the responsibility of others. The design and structural capacity of mating surfaces (such as walls), vary greatly and specific fasteners are designed for use with specific mating surfaces. One Systems does not recommend any mating fasteners and strongly urges the installer to consult with one experienced in suspension of products from specific mating surfaces and the appropriate choice of fasteners for those specific surfaces.

After the PT wall section of the bracket is securely mounted to the mating surface, the loudspeaker section should be mounted to the loudspeaker using the fasteners supplied. (DO NOT SUBSTITUTE FASTENERS)  The loudspeaker mount section of each bracket is shown in figures 2a and 2b.

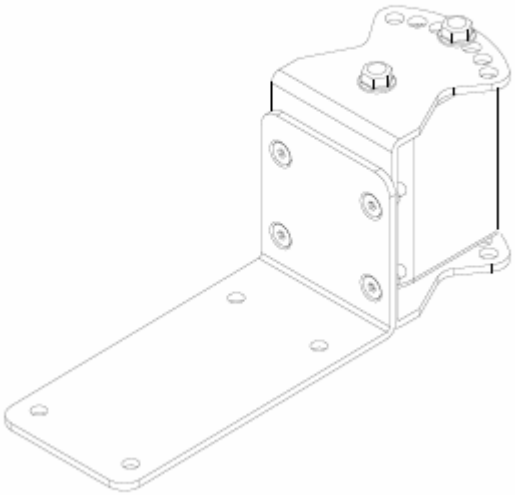

Figure 2a.  PT-35 speaker mount bracket

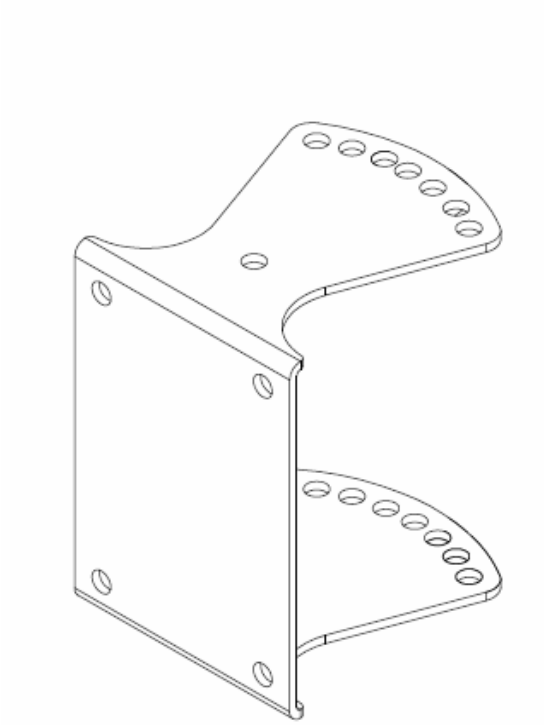

Figure 2b. PT-70 speaker mount bracket

The PT-70 mounts to the rear of ALL IM series enclosures, except for the 108IM and 208CIM, using the 140mm x 90mm M10 locations as shown in figure 2c. The PT-35 mounts to the top or bottom of the 108IM or 208CIM as shown in figure 2c using the M8 locations. The mounting locations are highlighted in red.

*DO NOT SUBSTITUTE MOUNTING LOCATIONS!*

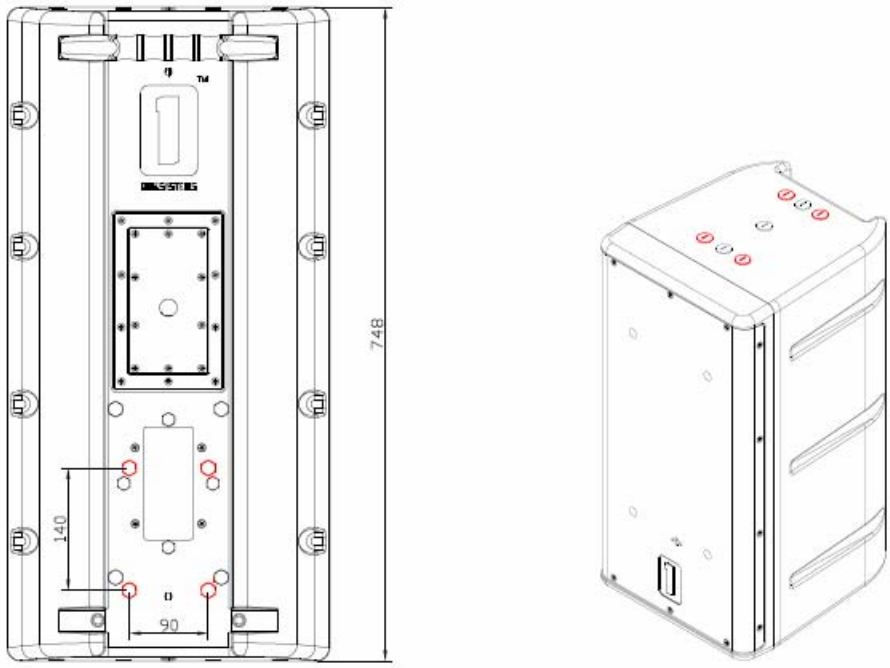


Figure 2c

The loudspeaker and loudspeaker section of the bracket may then be joined to the wall section and the required pan and tilt angles selected. This is a two person job and extreme care should be exercised to avoid serious injury.

Figure 3 is a representation of the Safety Link assembly. This assembly MUST be used whenever the PT-70 or PT-35 is being used. Each pan and tilt bracket is supplied with a safety link assembly.

SEE SECTION 5 BELOW FOR DETAILS ON THE PROPER MOUNTING OF THE SAFETY LINK ASSEMBLY!

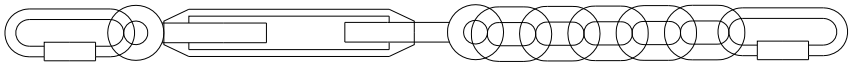

Figure 3

The wall bracket section should be secured firmly to the mating surface using the appropriate fastening system. The fastening system should be determined by the structure of the mating surface.

IT IS CRITICAL THAT THE MATING SURFACE BE CAPABLE OF SUPPORTING THE LOAD OF THE PT BRACKET, THE LOUDSPEAKER AND ALL SUSPENSION HARDWARE, AS WELL AS PROVIDING THE PROPER SAFETY FACTORS. DO NOT ATTEMPT TO SUSPEND THE BRACKET AND LOUDSPEAKER UNTIL THE STRUCTURAL CHARACTERISTICS OF THE MATING SURFACE ARE UNDERSTOOD. DO NOT INSTALL THE PT BRACKET AND LOUDSPEAKER IF THE MATING SURFACE IS NOT CAPABLE OF SUPPORTING THE ENTIRE ASSEMBLY WEIGHT, AS WELL AS PROVIDING THE REQUIRED SAFETY FACTORS!

## POLE MOUNTING THE WITH THE PT-70 AND PT-35

The PT-70 and PT-35 also have slots cut in the wall mount section of the bracket that allow the brackets to be pole mounted. The pole mount section requires that BAND-IT brand stainless steel bands be used. Rectangular poles must have a flat mounting surface of at least 5.5 inches (140mm) for mounting. Circular poles must have a diameter of at least 8 inches (203mm)

Figure 4 shows the PT-70 with slots visible. The slots are shown in red. There are 4 slots and ALL 4 slots must be utilized for secure mounting to a pole. Each of the 4 slots must use BAND-IT bands as described in step 1 below.

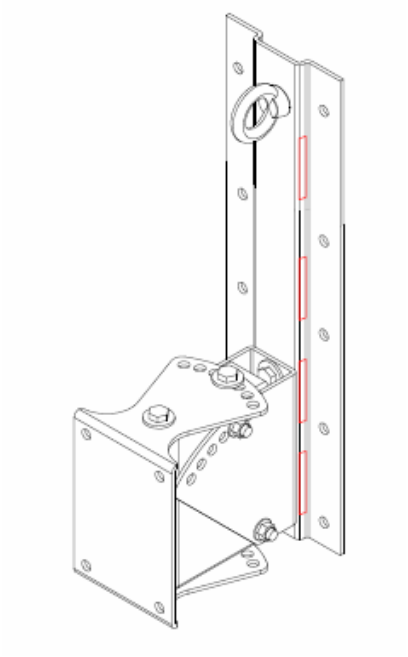

Figure 4

Figure 5 shows the PT-35 with slots visible. There are 3 slots, shown in red. Each of the 3 slots must be utilized to insure a secure mount to a pole.

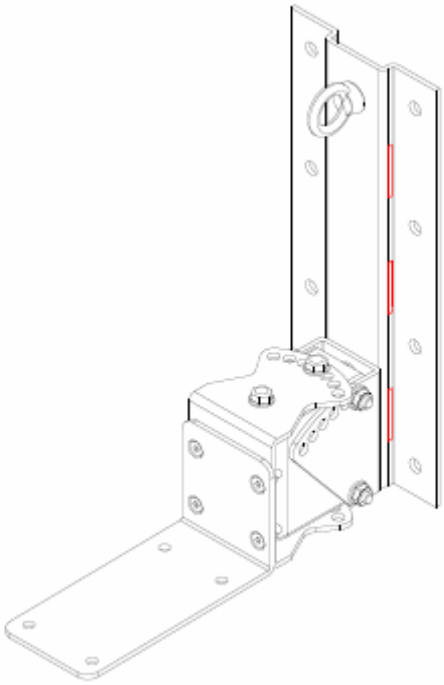

Figure 5

1. Mount the wall bracket section (see figure 1a) of the bracket to the pole at the desired height on the pole. The bracket is mounted to the pole using BAND-IT stainless steel bands. DO NOT SUSTITUTE bands of other material or other widths! There are four locations on the pole bracket for bands. ALL 4 LOCATIONS MUST BE USED on the PT-70. There are 3 locations for the PT-35, ALL THREE MUST BE USED. Figure 6 illustrates the locations for the stainless steel band clamps.(PT-70 is shown)

   It is REQUIRED that each of the four bands be DOUBLE wrapped. Double wrapping will insure a strong and secure mounting of the bracket to the pole. The stainless steel banding materials should be as follows:

   | | |
   |---|---|
   | BAND-IT | # C206R9 stainless steel bands |
   | BAND-IT | # C25699 buckles |
   | BAND-IT | # C00169 tensioning tool |

   The stainless steel band is Type 201SS 0.030 inches (0.762mm) thick and 0.750 inches (19mm) wide.

   WARNING: Do NOT substitute banding materials or banding dimensions.

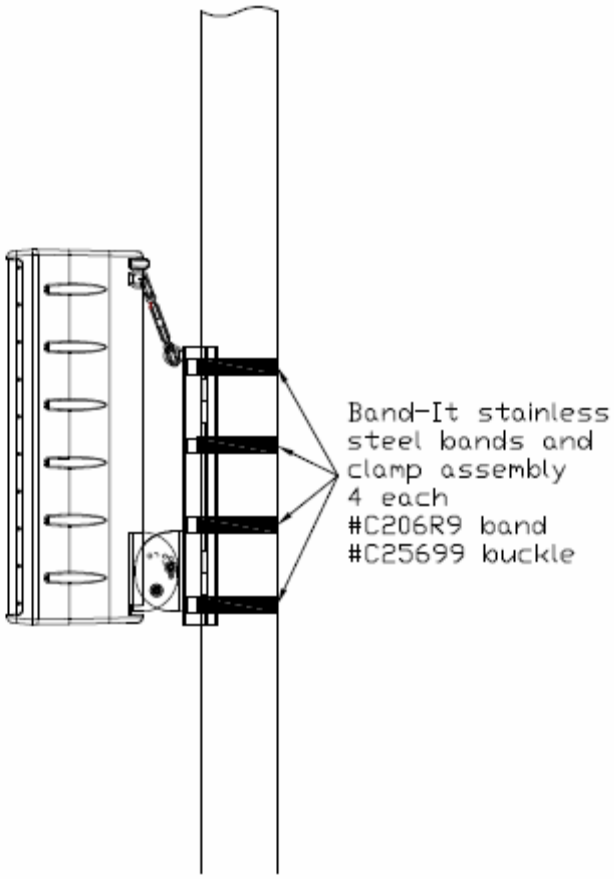


Figure 6
PT-70 bracket shown

Installation instructions from BAND-IT should be followed exactly. Operating instructions are supplied with the tensioning tool. (All BAND-IT parts and tools purchased separately. These parts and tools are not supplied by ONE SYSTEMS)

The stainless steel banding material, buckles, and tensioning tools are available from the following locations (or though distributors recommended by these locations):

BAND-IT IDEX, Inc.
4799 Dahlia St.
Denver Colorado 80216
USA
1-800-525-0758

FELIX PONCE
Calle Ignacio Zaragonza No. 8
Colonia Ahuehuetes Atizapan 52953
Edo. de Mexico
(52) 555825 8502

BAND-IT Company Limited
Speedwell Industrial Estate
Stavely, Nr. Chesterfield
Derbyshire, S43 3PF England
Home Sales (44) 1246-479479
Export Sales (44) 1246 479480

BAND-IT Clamps (ASIA) Pte. Ltd.
11 Second Chin Bee Road
Singapore 618777
65-62658853

BAND-IT Shanghai Sales Office
207 room
Wanbao International Business Centre
660# Xinhua Road
Shanghai, China 200052
021-62826348-308

2. Next, the loudspeaker bracket should be mounted to the loudspeaker using the supplied M10 (M8 for the 108IM and 208CIM) stainless steel bolts and internal tooth lock washers. DO NOT SUBSTITUE ANY PARTS

3. Now the M10 (M8 for 108IM and 208CIM) forged shoulder “eye” bolt should be installed in the top rear of the loudspeaker enclosure.

4. The loudspeaker may now be placed on the pole bracket.

USE EXTREME CAUTION! The loudspeaker is heavy and it is likely that the desired mounting location is high in the air. This process should never be attempted by a single person.

TWO PEOPLE ARE REQUIRED TO MOUNT THE LOUDSPEAKER ENCLOSURE TO THE WALL OR POLE AND PT bracket. (Safety harnesses should always be worn when working from an elevated platform)

First insert the bolt into the pivot point and secure, but do not fully tighten using the supplied nylon insert nut.

Now the enclosure may be set at its desired down tilt. The PT-70 bracket allows the loudspeaker to be oriented from a 0 degree down tilt to a maximum down tilt of 30 degrees and the PT-35 allows a down tilt of 25 degrees.

UNDER NO CIRCUMSTANCES SHOULD THE LOUDSPEAKER DOWN TILT EXCEED 35 DEGREES FROM VERTICAL!

## SECTION 5 SAFETY LINK ASSEMBLY

5. Now the Safety Link must be installed.

INSTALLING THE Pan and Tilt Brackets WITHOUT THE SAFETY LINK IS NOT ALLOWED!

The Safety Link (see figure 3) consists of two stainless steel quick links, a stainless steel turnbuckle, and several links of stainless steel chain.

DO NOT SUBSTITUTE ANY PART OF THIS SAFETY LINK ASSEMBLY!

The Safety Link should be tightened by rotating the turnbuckle until there is tension on the Safety Link assembly. Do not over tighten. The purpose of the Safety Link is to slightly remove tension from the main PT-70 or PT-35 tilting bracket at the bottom of the assembly. The Safety Link functions as both a safety and as a load bearing assembly.

The Safety Link should be assembled as shown in Figure 3. Make sure to use the appropriate number of chain links to insure proper connection between the PT-70 or PT-35 and the specific One Systems enclosure. Figure 7 shows the loudspeaker assembly and Safety Link in a 0 degrees vertical orientation.

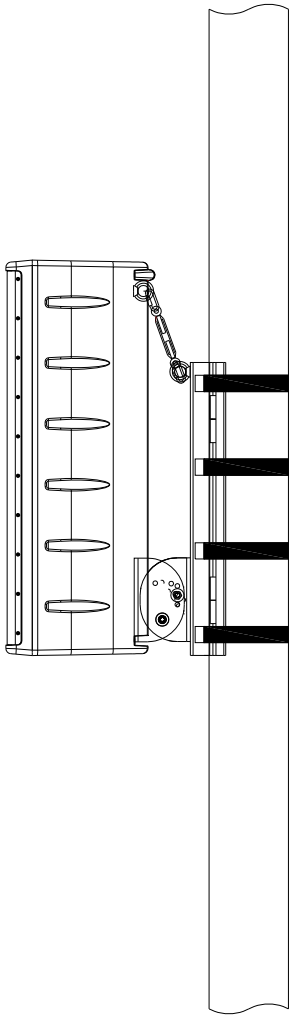

Figure 7

Figure 8 is an enlarged view of the Safety Link assembly configured for a 0 degree vertical down tilt angle.

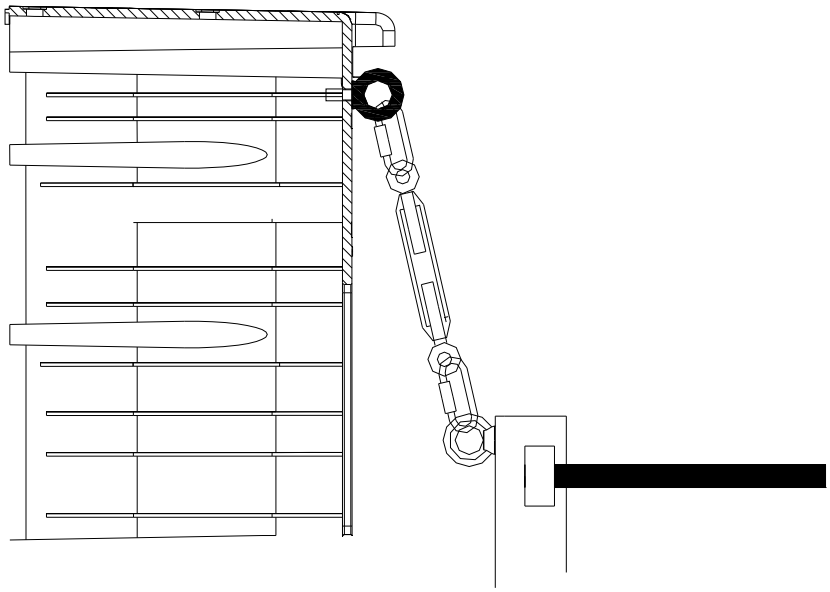

Figure 8

Warning, if the turnbuckle assembly is turned and the loudspeaker enclosure angle begins to change. (if the down tilt angle begins to move toward 0 degrees vertical) then the turnbuckle has been OVER TIGHTENED)  Turn the turnbuckle until the down tilt angle is set by the M10 thru bolt on the pole bracket.

Angles other than 0 degrees from vertical require the stainless steel chain links to be inserted as shown in Figures 9 and 10.

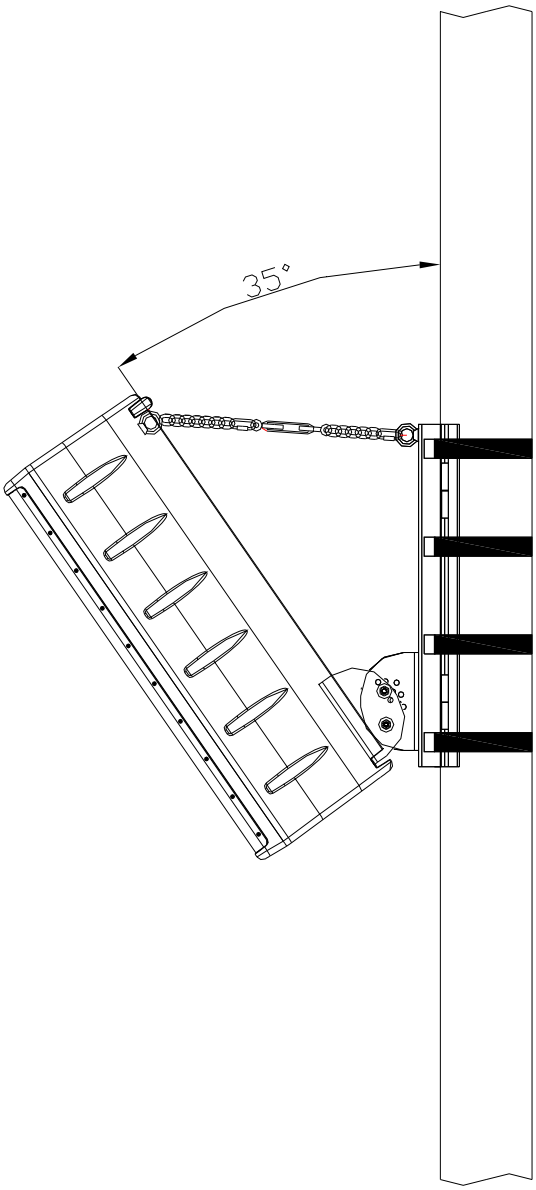


Figure 9

Figure 9 represents the maximum down tilt angle of 35 degrees from vertical. Figure 10 is a close up view of the Safety Link assembly with the chain configured for this maximum angle. The lower quick link is positioned in various chain segments based on

the desired degree of down tilt. The turnbuckle should be adjusted, as described in this section

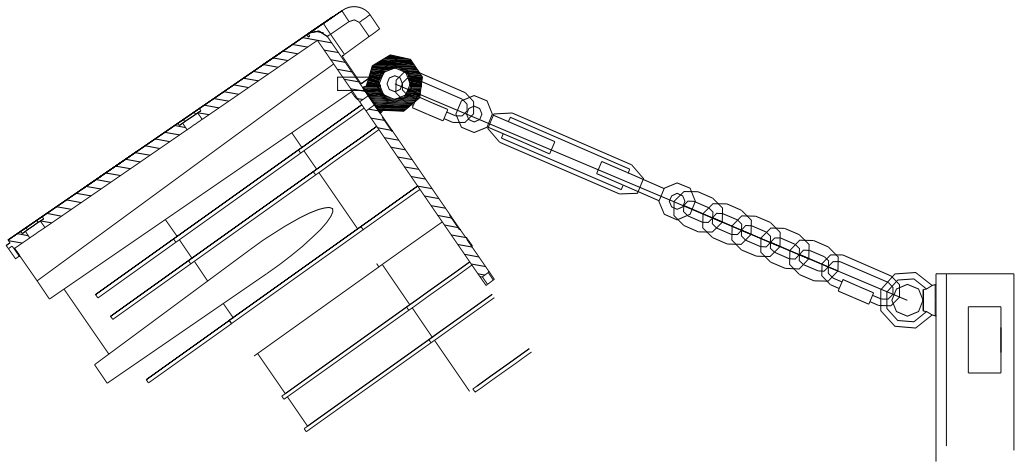

Figure 10

Figure 11 shows a close up view of the Safety Link with one of the chain links moved to allow for an angle of less than the 35 degree max shown in Figure 9.

In any position, the turnbuckle must be adjusted to allow the proper amount of tension on the Safety Link. The safety link should never pull the loudspeaker up towards vertical. The link should be set in order to eliminate loose chain links only!

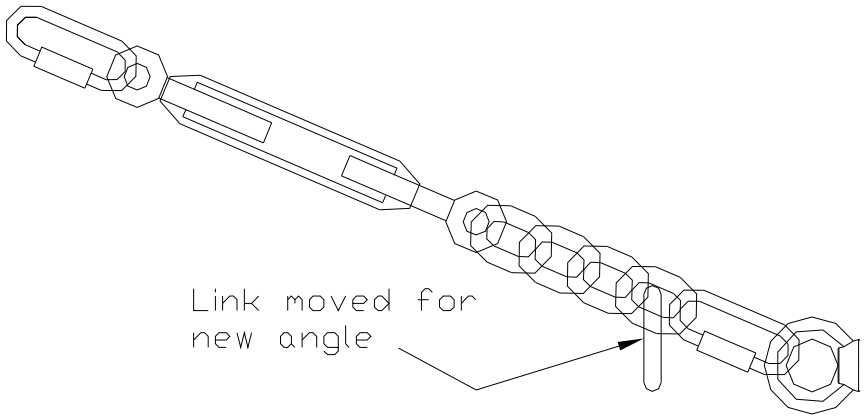


Figure 11

# PT-10 Installation

The One Systems PT-10 is designed for use with the 103IM and 106IM family of One Systems products only.

!DO NOT SUBSTITUTE OTHER LOUDSPEAKER ENCLOSURES!

The PT-10 has been designed as a low cost yet flexible pan and tilt system and is intended for use with small format, low Q loudspeaker systems. The PT-10 offers 10 degree aiming increments and will provide up to 5 steps within the nominal 100 degree pattern of either the 103IM or the 106IM.  Figure 12 represents the PT-10 pan and tilt bracket.

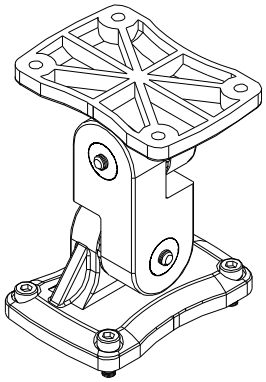

Figure 12

There are two center pieces that may be used for aiming with the PT-10 bracket. Each “center piece” offers aiming resolution of 20 degrees but substitution of the center pieces will yield aiming resolution of 10 degrees.

Figure 12a shows the two center pieces. The 10 degree aiming resolution is achieved by substituting the appropriate center piece to achieve a TOTAL resolution of 10 degrees between the two center pieces. These two  center pieces are interchangeable and may be used to set the desired angles.

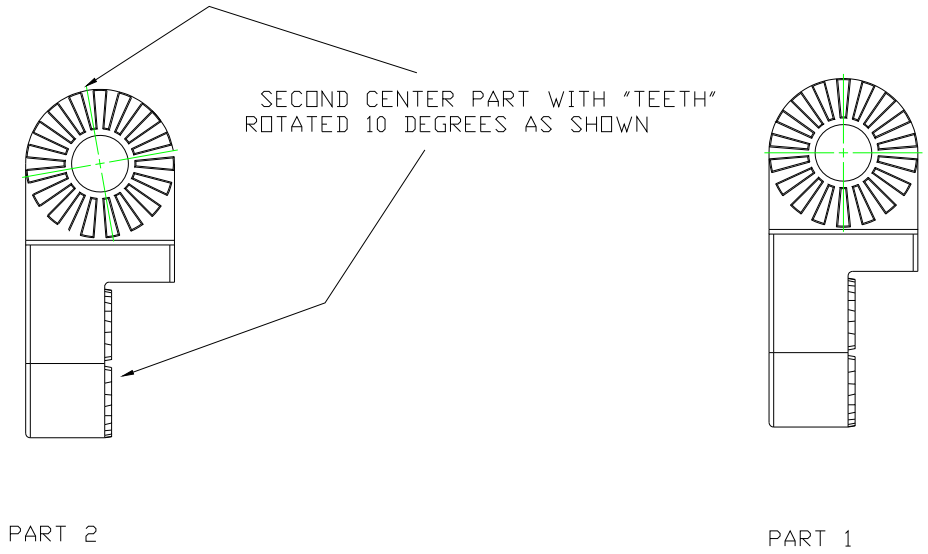


FIGURE 12a

Figure 13 shows a One Systems 103IM mounted to a PT10. There are 4 M5 stainless steel bolts that are supplied with the PT-10 for mounting to either the 103IM or the 106IM. Once the PT-10 is mounted to the specific loudspeaker enclosure the two stainless steel bolts on the center piece of the PT-10 may be loosened to allow the bracket to be rotated in both the “pan” and “tilt” axis. Once proper loudspeaker aiming is achieved both of these bolts must be securely fastened to insure the assembly will not move.

It is necessary to fit an additional safety assembly between the loudspeaker enclosure and the mounting surface. This safety assembly is not supplied by One Systems. The safety assembly must conform to local and national codes.

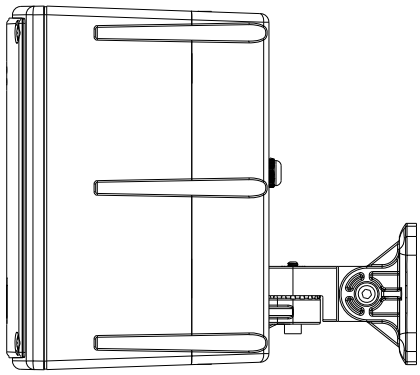

Figure 13

# APPENDIX 1

## (Projected Area Values)

The values below should be supplied to the specific pole manufacturer for safety calculations. These values were determined by adding the projected areas of the high frequency horns, the woofer cones and ports to the cross sectional area of the front of each enclosure listed below.

103IM …… 67 in^2 (43,000mm^2)

106IM..... 136 in^2 (88,000mm^2)

108IM…….. 250 in^2 (161,290mm^2)
(60x40 HF horn)

208CIM…… 207 in^2 (133,550mm^2)

112IM ……600 in^2 (387,096 mm^2)
(60x40 HF horn)

212CIM…… 600 in^2 (387,096mm^2)

212IM ……804 in^2 (550,000 mm^2)

312CIM…… 804 in^2 (550,000mm^2)

Cross Field Array……. 2,708in^2 (1,750,000mm^2)

# Pan and Tilt Bracket Installation

## PT-70-2, PT-35-2 and PT-10 **(Issued November 2009)**

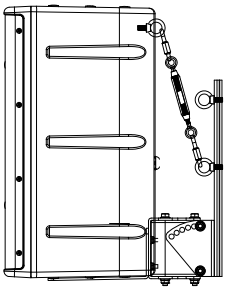

PT-35-2 with 108IM

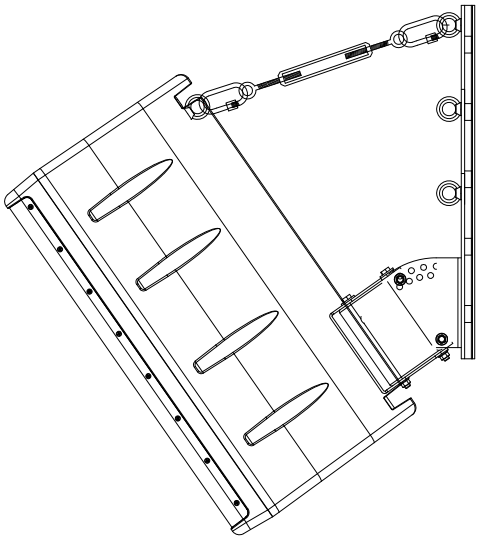

PT-70-2 with 112IM

The PT-70-2, PT-35-2 and PT-10 are easy to install and flexible systems designed to allow ONE SYSTEMS loudspeaker products to be mounted to wall and certain pole structures. The PT-10 instructions are found at the end of this document. The only products approved for use with the PT-70-2 and PT-35-2 includes the following:

**PT-70-2**
112IM
112IM-70
112IM-100
212CIM
212CIM-70
212CIM-100
212IM
212IM-70
212IM-100
312CIM
312CIM-70
312CIM-100
CFA
CFA-70
CFA-100
115TW

**PT-35-2**
108IM
108IM-70
108IM-100
208CIM
208CIM-70
208CIM-100

**PT-10**
103IM
103IM-70
103IM-100
106IM
106IM-70
106IM-100

**NOTE:** The 112UM is also compatible with the PT-70-2, but a user supplied stainless steel wire rope assembly is required in place of the Link assembly for 10 degrees or less down tilt. The wire rope diameter should be 3/32 inch (2.5mm) or larger.

**NO OTHER LOUDSPEAKERS SHOULD BE SUBSTITUTED!**

The following actions **MUST** be performed **PRIOR** to beginning the installation of the PT-70-2, PT-35-2 or PT-10:

1. This installation guide must be completely read and understood

2. The instruction manual ***"Rigging and Suspension of One Systems Products"*** must be read and understood. (This instruction manual is available with other technical papers at www.onesystems.com by clicking on the "Documentation" tab on the home page, then by clicking "Educational Papers"

3. The structure of the mating surface MUST be capable of supporting the combined weight of the pan and tilt bracket, the loudspeaker and all associated rigging; and must satisfy the required safety factors specified by local and national codes, as well as safe rigging practices.

4. The PT-70-2, PT-35-2 and PT-10 pan and tilt brackets should be installed only by someone experienced in the overhead suspension of items. They should be familiar with applicable local/national codes governing the installation of these types of products and those governing the attachment of these types of products to specific pole structures.

**CAUTION:** All structures outdoors are subjected to wind forces. These forces must be considered when suspending any product outdoors. It is necessary to know the "Effective Projected Area" (EPA) of the loudspeaker prior to installation of the loudspeaker and the PT-70-2, PT-35-2 or PT-10. See Appendix 1 of this installation manual for effective projected areas for each enclosure rated for use with the PT-70-2, PT-35-2 and PT-10.

# INSTALLATION

## NOTE: See separate instructions for the PT-10 later in this document

The PT-70-2 and PT-35-2 consist of three parts: the wall bracket, the loudspeaker bracket, and the Link. The PT-70-2 wall bracket and loudspeaker bracket are shown in Figure 1. Figure 1a shows the wall bracket portion of the PT-70-2. The PT-70-2 bracket allows the loudspeaker to be oriented from a 0 degree down tilt to a maximum down tilt of 35 degrees in 5 degrees increments. The PT-35-2 allows a down tilt of 40 degrees in 8 degree increments.

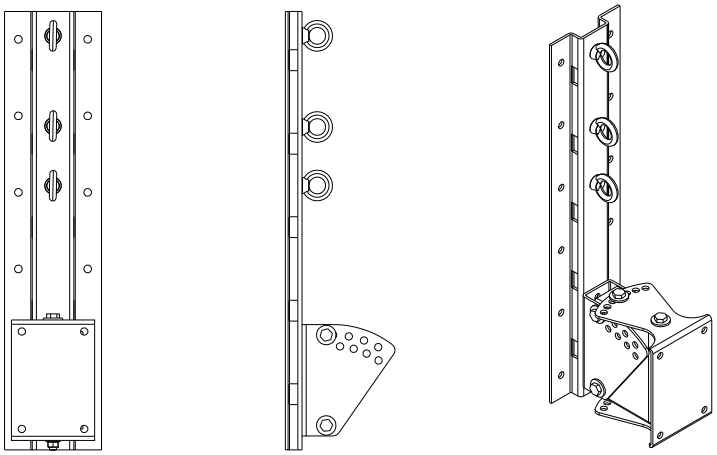

Figure 1

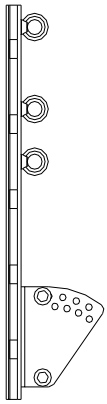

Figure 1a

The PT-35-2 wall bracket and loudspeaker bracket are shown in Figure 2.

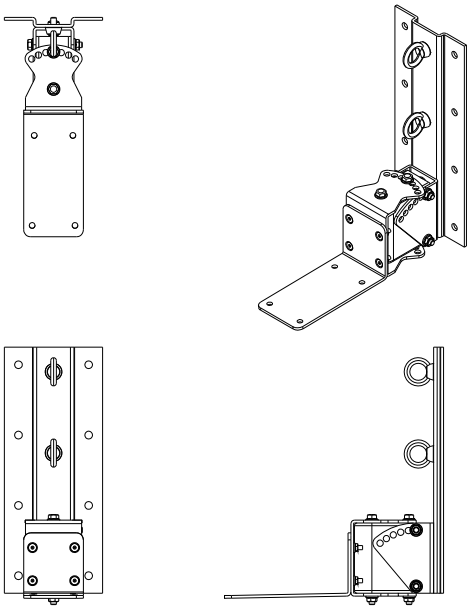

Figure 2

Prior to mounting the wall bracket to the wall the speaker mount section should be removed. See Figures 2a and 2b.

NOTE: The M10 bolts associated with the “pan” axis should be left in place, as shown in both Figures 2a and 2b.

The wall bracket section should now be mounted to the wall surface. The PT-70-2 has 12 mounting holes and the PT-35-2 has 8 mounting holes for allowing fasteners to join the bracket and loudspeaker assembly to the mating surface.

IT IS NECESSARY TO USE ALL MOUNTING HOLES TO INSURE A SAFE AND SECURE MATE TO THE ASSOCIATED SURFACE! (12 for the PT-70-2 and 8 for the PT-35-2)

All fasteners associated with the mounting of the Pan and Tilt bracket and loudspeaker assembly to the mating surface are the responsibility of others. The design and structural capacity of mating surfaces (such as walls) vary greatly and specific fasteners are designed for use with specific mating surfaces. One Systems does not recommend any mating fasteners and strongly urges the installer to consult with one experienced in suspension of products from the specific mating surfaces and the appropriate choice of fasteners for those specific surfaces.

The wall bracket section should be secured firmly to the mating surface using the appropriate fastening system. The fastening system should be determined by the structure of the mating surface.

IT IS CRITICAL THAT THE MATING SURFACE BE CAPABLE OF SUPPORTING THE LOAD OF THE PT BRACKET, THE LOUDSPEAKER AND ALL SUSPENSION HARDWARE, AS WELL AS PROVIDING THE PROPER SAFETY FACTORS. DO NOT ATTEMPT TO SUSPEND THE BRACKET AND LOUDSPEAKER UNTIL THE STRUCTURAL CHARACTERISTICS OF THE MATING SURFACE ARE UNDERSTOOD. DO NOT INSTALL THE PT BRACKET AND LOUDSPEAKER IF THE MATING SURFACE IS NOT CAPABLE OF SUPPORTING THE ENTIRE ASSEMBLY WEIGHT, AS WELL AS PROVIDING THE REQUIRED SAFETY FACTORS!

After the PT wall section of the bracket is securely mounted to the mating surface, the loudspeaker section should be mounted to the loudspeaker using the fasteners supplied. (DO NOT SUBSTITUTE FASTENERS) The loudspeaker mount section of each bracket is shown in figures 2a and 2b.

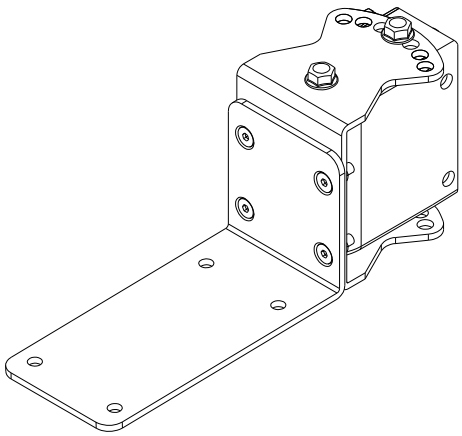

Figure 2a PT-35-2 speaker mount bracket

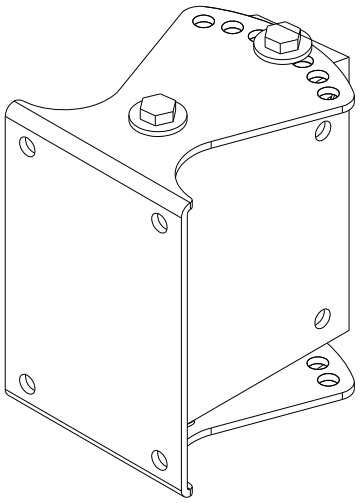

Figure 2b PT-70-2 speaker mount bracket

The PT-70-2 mounts to the rear of ALL IM series enclosures, except for the 108IM and 208CIM, using the 140mm x 90mm M10 locations as shown in figure 2c. The PT-35-2 mounts to the top or bottom of the 108IM or 208CIM as shown in figure 2c using the M8 locations. The mounting locations are highlighted in red.

**DO NOT SUBSTITUTE MOUNTING LOCATIONS!**

NOTE: There are 8 each hex head M10 bolts supplied in the mounting kit of the PT-70-2. When mounting the 115TW, 112UM and 115UM (wood) enclosures to the PT-70-2 use 4 each of the 45mm (longer) M10 bolts. The 4 shorter M10 bolts are used for the IM series injection molded enclosures.

Additionally, there are forged shoulder eyebolts supplied in the PT kits, 2 each M10 eyebolts for the PT-70-2 and 1 each M8 eyebolt for the PT-35-2. One of these eyebolts must be installed in the top, rear portion of the enclosure. When installing the PT-70-2, use the longer of the two M10 eyebolts for wood enclosures and the shorter of the two M10 eyebolts for the IM series enclosures. Make sure that the eyebolt is seated on the surface of the enclosure.

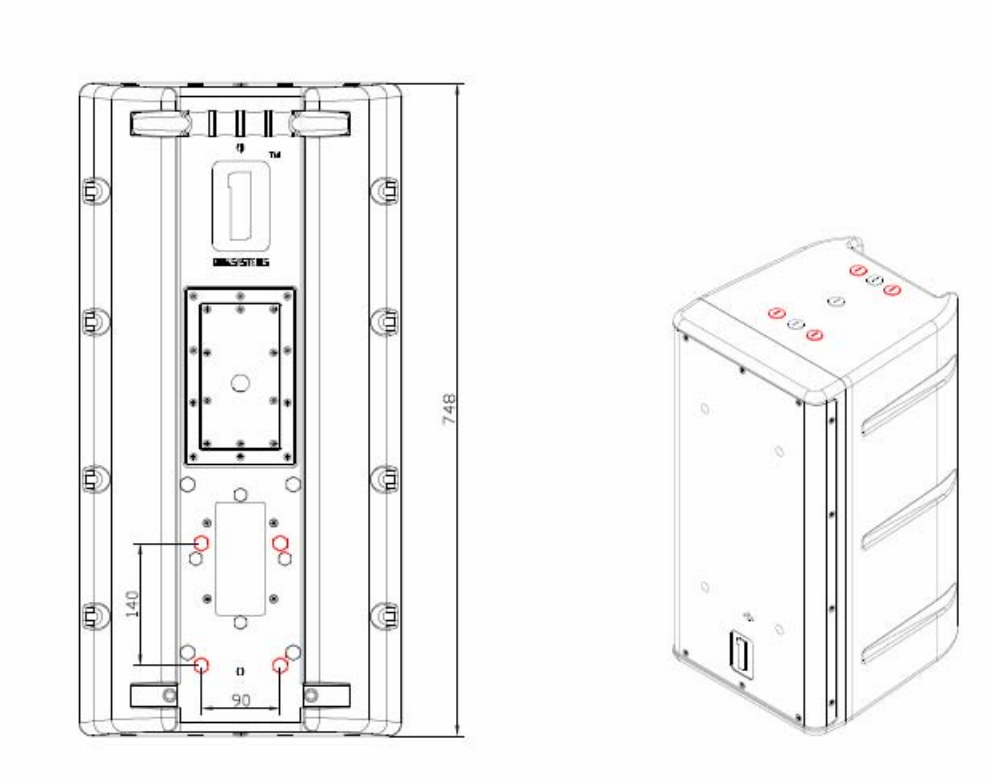


Figure 2c

The loudspeaker and loudspeaker section of the bracket may now be joined to the wall section and the required pan and tilt angles selected. This is a two person job and extreme care should be exercised to avoid serious injury.

The M10 tilt pivot bolt should be inserted first and secured but not completely tightened using the nylon insert M10 nuts supplied. The tilt pivot bolt is shown below in Figure 2d. Then the M10 tilt aiming bolt should be inserted and nylon insert nuts applied. Then the tilt axis bolts should be tightened.

CAUTION: DO NOT REMOVE THE PAN PIVOT BOLT

Next the pan angle may be adjusted by removing the M10 pan aiming bolt, but NOT the pan pivot bolt, and setting the desired pan angle and then re inserting the M10 bolt.

Once both the tilt and pan angles are set, make sure that all bolts are tight and secure.

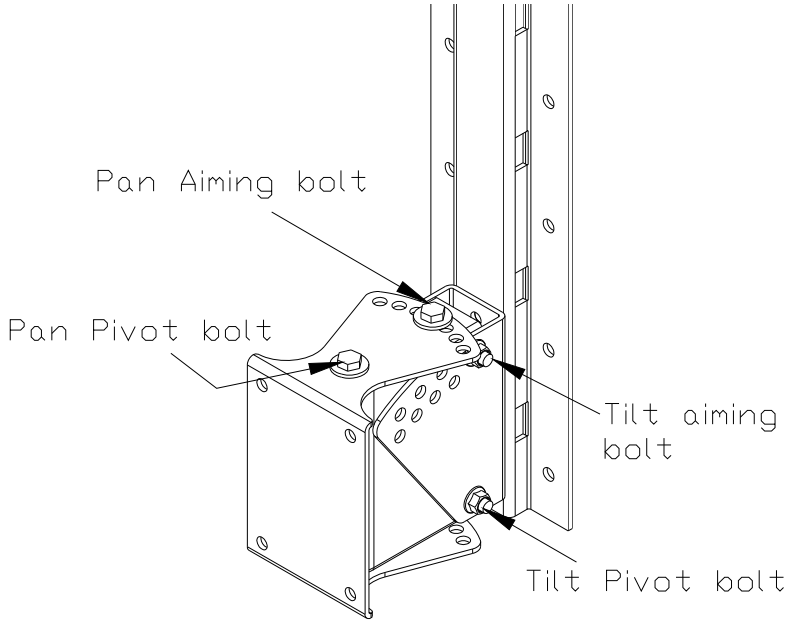


Figure 2d

INSTALLING THE LINK

Figure 3 is a representation of the Link assembly. This assembly MUST be used whenever the PT-70-2 or PT-35-2 is being used. Each pan and tilt bracket is supplied with a link assembly. (The 112UM does NOT use the Link and requires a user supplied wire rope assembly in place of the LINK!)

SEE SECTION 5 OF THIS MANUAL FOR DETAILS ON THE PROPER MOUNTING OF THE LINK ASSEMBLY!

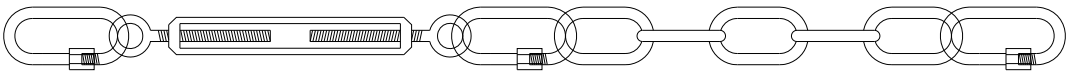

Figure 3

POLE MOUNTING THE WITH THE PT-70 AND PT-35

Prior to mounting the wall bracket to the pole the speaker mount section should be removed. (See Figures 2a and 2b)

NOTE: The M10 bolts associated with the “pan” axis should be left in place, as shown in both Figures 2a and 2b.

CAUTION: DO NOT REMOVE THE PAN PIVOT BOLT

The PT-70-2 and PT-35-2 also have slots cut in the wall mount section of the bracket that allow the brackets to be pole mounted. The pole mount section requires that BAND-IT brand stainless steel bands be used.

For the PT-70-2, rectangular poles must have a flat mounting surface of at least 5.5 inches (140mm) for mounting. Circular poles must have a diameter of at least 8 inches (203mm).

For the PT-35-2, rectangular poles must have a flat mounting surface of at least 5.5 inches (140)mm. Circular poles must have a diameter of at least 4 inches (101)mm.

IMPORTANT: Figure 4 shows the PT-70-2 with slots visible. The slots are shown in red. There are 5 slots and ALL 5 slots must be utilized for secure mounting to a pole. Each of the 5 slots must use double wrapped BAND-IT bands as described in step 1 below.

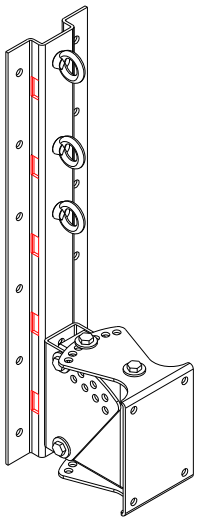

Figure 4

Figure 5 shows the PT-35-2 with slots visible.

IMPORTANT: There are 3 slots, shown in red. Each of the 3 slots must be utilized to insure a secure mount to a pole. ALL 3 slots must use double wrapped bands!

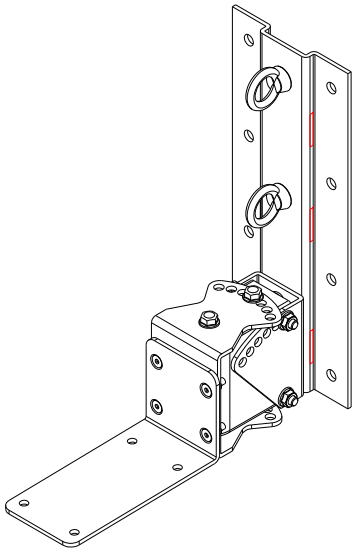

Figure 5

1. Mount the wall bracket section (see figure 1a) of the bracket to the pole at the desired height on the pole. The bracket is mounted to the pole using BAND-IT stainless steel bands. DO NOT SUSTITUTE bands of other material or other widths! There are five locations on the pole bracket for bands. ALL 5 LOCATIONS MUST BE USED on the PT-70-2. There are 3 locations for the PT-35-2 and ALL 3 slots MUST BE USED. Figure 6 below illustrates the locations for the stainless steel band clamps.(PT-70 is shown)

   It is REQUIRED that ALL bands be DOUBLE wrapped. Double wrapping will insure a strong and secure mounting of the bracket to the pole. The stainless steel banding materials should be as follows:

   BAND-IT # C206R9 stainless steel bands
   BAND-IT # C25699 buckles
   BAND-IT # C00169 tensioning tool

   The stainless steel band is Type 201SS 0.030 inches (0.762mm) thick and 0.750 inches (19mm) wide.

   WARNING: Do NOT substitute banding materials or banding dimensions.

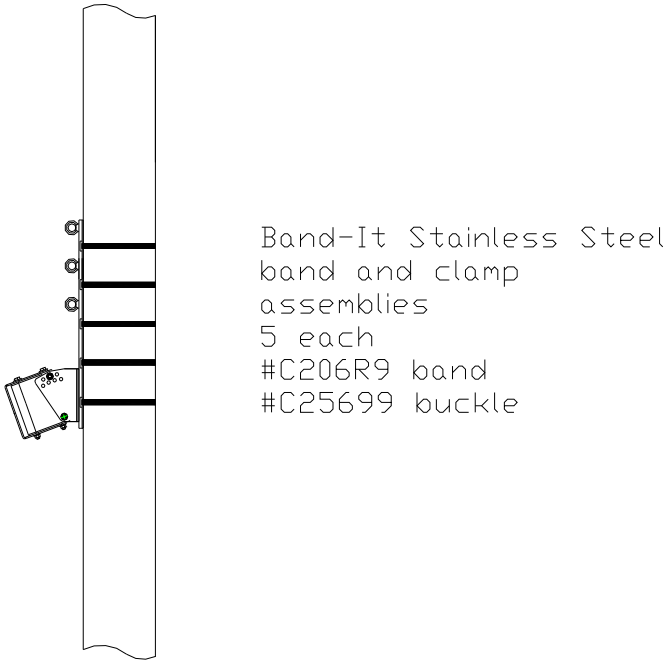


Figure 6
PT-70-2 bracket shown

Installation instructions from BAND-IT should be followed exactly. Operating instructions are supplied with the tensioning tool. (All BAND-IT parts and tools purchased separately. These parts and tools are not supplied by ONE SYSTEMS)

The stainless steel banding materials, buckles and tensioning tools are available from the following locations (or though distributors recommended by these locations):

BAND-IT IDEX, Inc.
4799 Dahlia St.
Denver Colorado 80216
USA
1-800-525-0758

P&C Industrial Supplies
1-800-922-9291
(P&C is an authorized U.S.A. Distributor for Band-It Products)

FELIX PONCE
Calle Ignacio Zaragonza No. 8
Colonia Ahuehuetes Atizapan 52953
Edo. de Mexico
(52) 555825 8502

BAND-IT Company Limited
Speedwell Industrial Estate

Stavely, Nr. Chesterfield
Derbyshire, S43 3PF England
Home Sales (44) 1246-479479
Export Sales (44) 1246 479480

BAND-IT Clamps (ASIA) Pte. Ltd.
11 Second Chin Bee Road
Singapore 618777
65-62658853

BAND-IT Shanghai Sales Office
207 room
Wanbao International Business Centre
660# Xinhua Road
Shanghai, China 200052
021-62826348-308

2. Next, the loudspeaker bracket should be mounted to the loudspeaker using the supplied M10 (M8 for the 108IM and 208CIM) stainless steel bolts and internal tooth lock washers. DO NOT SUBSTITUE ANY PARTS

3. Now the M10 (M8 for 108IM and 208CIM) forged shoulder “eye” bolt should be installed in the top rear of the loudspeaker enclosure. Make sure that that eyebolt is seated on the enclosure surface.

NOTE: There two (2) forged shoulder eye bolts included. One has a 17mm threaded section and the second has a 40mm threaded section. Use the 17mm threaded section eye bolt for the 112IM, 212CIM, 212IM, 312CIM and CFA enclosures. Use the 40mm threaded section for the 115TW, 112UM, and 115UM wood enclosures.

4. The loudspeaker may now be placed on the pole bracket.

**USE EXTREME CAUTION!** The loudspeaker is heavy and it is likely that the desired mounting location is high in the air. This process should never be attempted by a single person.

TWO PEOPLE ARE REQUIRED TO MOUNT THE LOUDSPEAKER ENCLOSURE TO THE WALL, POLE AND PT bracket. Safety harnesses should always be worn when working from an elevated platform.

CAUTION: DO NOT REMOVE THE PAN PIVOT BOLT (See Figure 2d)

The M10 tilt pivot bolt should be inserted first and secured but not completely tightened using the nylon insert M10 nut supplied. The tilt pivot bolt is shown below in Figure 2d. Then the M10 tilt aiming bolt should be inserted and nylon insert nuts applied. Then the tilt axis bolts should be tightened.

Next the pan angle may be adjusted by removing the M10 pan aiming bolt, but NOT the pan pivot bolt, and setting the desired pan angle and then re inserting the M10 bolt.

Once both the tilt and pan angles are set, make sure that all bolts are tight and secure.

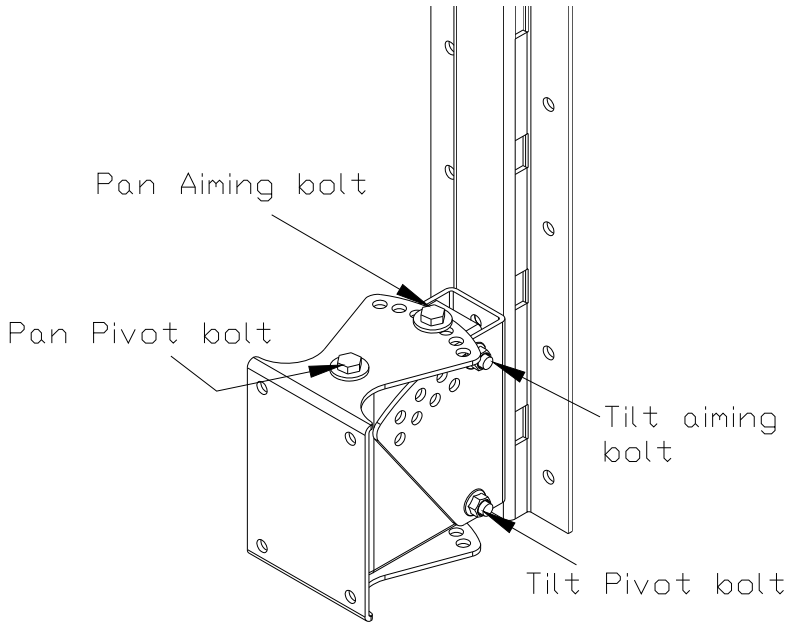


UNDER NO CIRCUMSTANCES SHOULD THE LOUDSPEAKER DOWN TILT EXCEED 35 DEGREES FROM VERTICAL FOR THE PT-70-2 (40 DEGREES FOR THE PT-35-2).

## SECTION 5 LINK ASSEMBLY

5. Now the Link must be installed.

INSTALLING the Pan and Tilt Brackets WITHOUT THE LINK IS NOT ALLOWED!
NOTE: The 112UM does not use the Link assembly for down tilt angles of 10 degrees or less from vertical. A user supplied wire rope assembly is required in place of the Link!

The Link (see figure 3) consists of stainless steel quick links, a stainless steel turnbuckle, and several links of stainless steel chain. The use of the chain pieces and quick links with the turnbuckle is based on the tilt angle of the enclosure. The turnbuckle should always be used.

DO NOT SUBSTITUTE ANY PART OF THIS LINK ASSEMBLY!

The Link should be tightened by rotating the turnbuckle until there is tension on the Link assembly. Do not over tighten. The purpose of the Link is to provide support for the main Pole Mount System tilting bracket at the bottom of the assembly.

The back plate sections of the PT-70-2 and PT-35-2 have eyebolts attached to them. There are 3 eyebolts on the back plate section of the PT-70-2 and 2 eyebolts on the back plate section of the PT-35-2. Figure 7 below illustrates which eyebolt should be used for each down tilt angle.

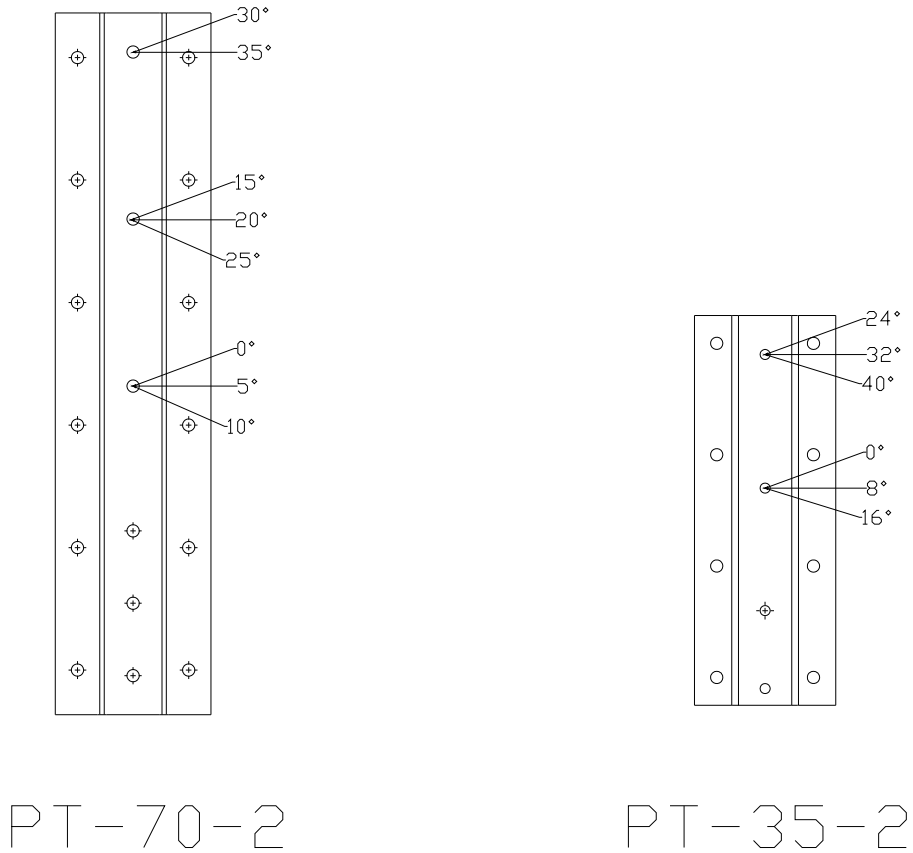


Figure 7

Make sure to use the appropriate combination of Link parts to insure proper connection between the Pole Mount System and the specific One Systems enclosure. The required combination of Link parts is determined by the down tilt angle of the enclosure.

The assembly may be configured with any combination of turnbuckle, chain link sections and quick link in order to achieve the proper tension on the system, but the turnbuckle must always be used. Figures 8a, 8b, and 8c show a 108IM and PT-35-2 at vertical, 24 degrees and 40 degrees using the eyebolt positions shown in Figure 7. Note that Figures 8a and 8b below use the same link and turnbuckle combination, but different eyebolt locations. Figure 8c below uses chain sections, as well as the quick links and the turnbuckle.

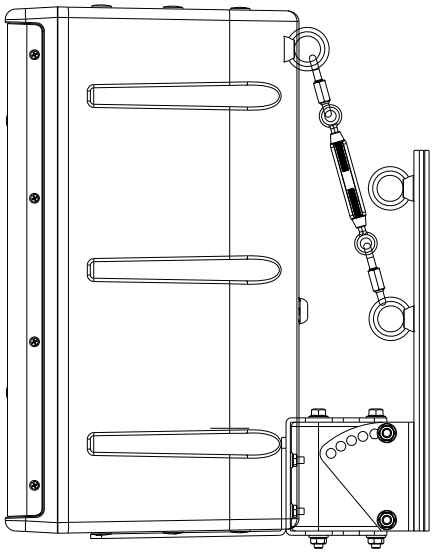

Figure 8a

Figure 8a represents the Link assembly with the enclosure in a vertical orientation and the Link using the lower eyebolt position.

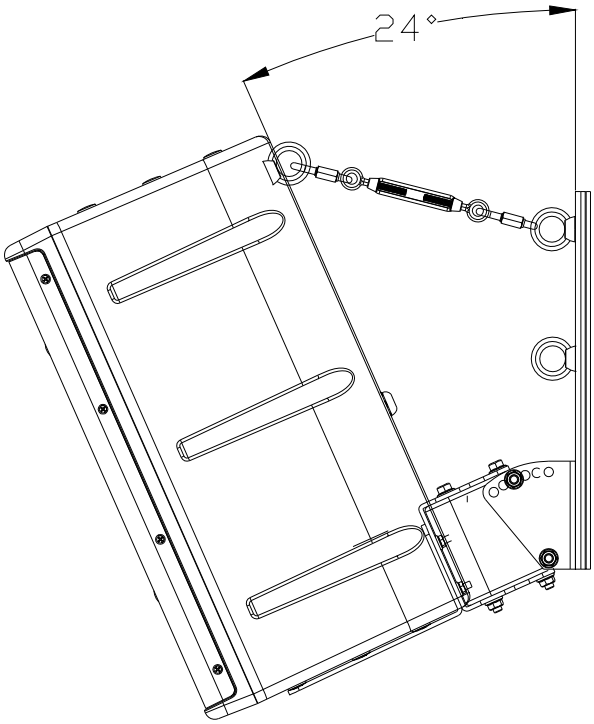


Figure 8b

Figure 8b above represents the Link with the enclosure in a 24 degree tilt. The Link is using the top eyebolt and the turnbuckle has been adjusted to provide mild tension.

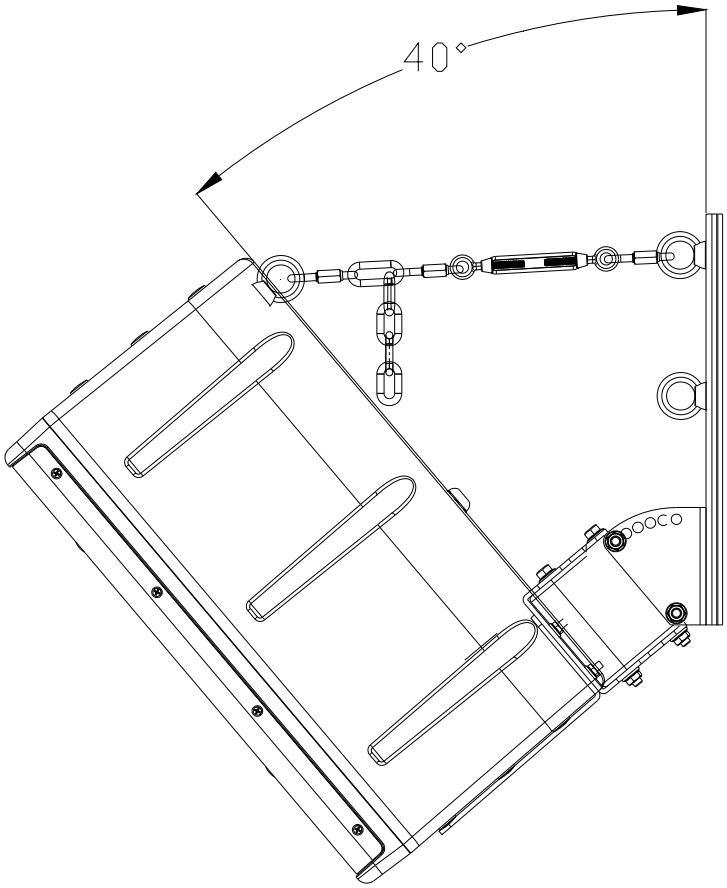


Figure 8c

Figure 8c above represents the Link assembly with the enclosure in a 40 degree tilt. The Link assembly uses the top eyebolt and the stainless steel chain has been added to achieve the proper tension on the assembly. Notice the “dropped” chain links in Figure 8c.

Warning, if the turnbuckle assembly is turned and the loudspeaker enclosure angle begins to change (if the down tilt angle begins to move toward 0 degrees vertical then the turnbuckle has been OVER TIGHTENED. Turn the turnbuckle until the down tilt angle is set by the M10 thru bolt on the pole bracket.

Figure 9 below shows a 312CIM mounted to a PT-70-2. The down tilt is 35 degrees so the top eyebolt is utilized as per Figure 7.

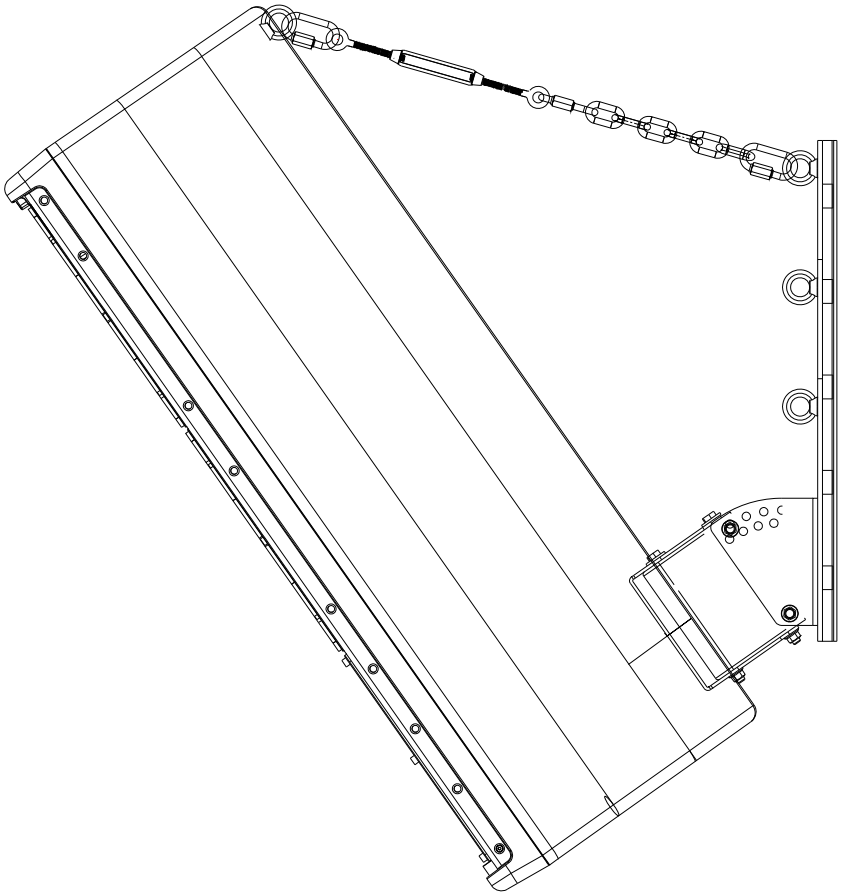

Figure 9

Figure 9 above represents the maximum down tilt angle of 35 degrees from vertical. Note that because the down tilt angle is 35 degrees the top eyebolt has been used, again per Figure 7.

Figure 10 below is a close up view of the Link assembly. Certain down tilt angles may require a link to be “dropped” from the chain as shown below. The lower quick link is positioned in various chain segments based on the desired degree of down tilt. The turnbuckle should be adjusted, as described in this section

In any position, the turnbuckle must be adjusted to allow the proper amount of tension on the Link. The Link should never pull the loudspeaker up towards vertical. The Link may be configured with or without the chain section and quick link depending on the down tilt angle of the enclosure.

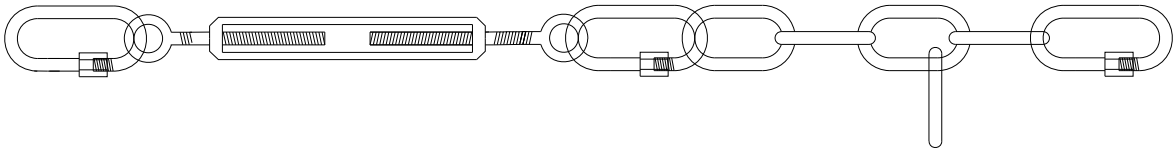

Figure 10

Secondary safety cables are STRONGLY recommended and should be secured to a structural point NOT associated with the PT bracket or loudspeaker.

## PT-10 Installation

The One Systems PT-10 is designed for use with the 103IM and 106IM family of One Systems products only.

**DO NOT SUBSTITUTE OTHER LOUDSPEAKER ENCLOSURES!**

The PT-10 has been designed as a low cost yet flexible pan and tilt system and is intended for use with small format, low Q loudspeaker systems. The PT-10 offers 10 degree aiming increments and will provide up to 5 steps within the nominal 100 degree pattern of either the 103IM or the 106IM.  Figure 11 below represents the PT-10 pan and tilt bracket.

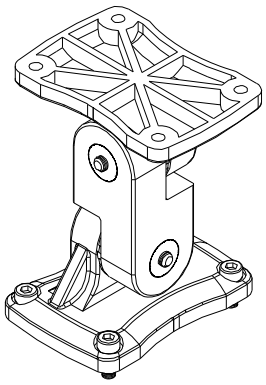

Figure 11

There are two center pieces that may be used for aiming with the PT-10 bracket. Each “center piece” offers aiming resolution of 20 degrees but substitution of the center pieces will yield aiming resolution of 10 degrees.

Figure 12a below shows the two center pieces. The 10 degree aiming resolution is achieved by substituting the appropriate center piece to achieve a TOTAL resolution of 10 degrees between the two center pieces. These two center pieces are interchangeable and may be used to set the desired angles.

Note the “rotated clock” section in “Part 2” of Figure 11a below. This section is rotated 10 degrees from the part labeled “Part 1” and is what allows the aiming increments to be adjusted in 10 degrees steps.

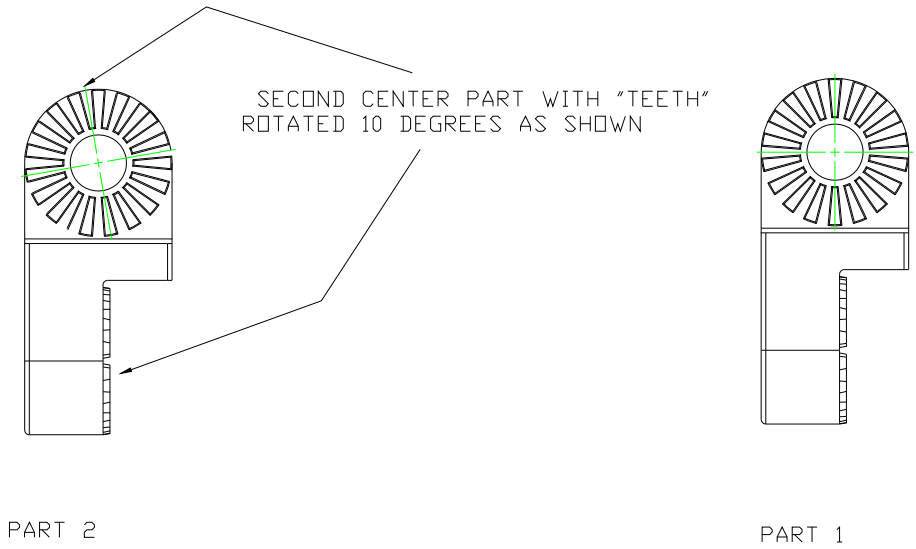


FIGURE 11a

Figure 12 below shows a One Systems 103IM mounted to a PT10. There are four (4) M5 stainless steel bolts that are supplied with the PT-10 for mounting to either the 103IM or the 106IM. Once the PT-10 is mounted to the specific loudspeaker enclosure the two stainless steel bolts on the center piece of the PT-10 may be loosened to allow the bracket to be rotated in both the “pan” and “tilt” axis. Once proper loudspeaker aiming is achieved both of these bolts must be securely fastened to insure the assembly will not move.

**NOTE:** It is strongly recommended that a “temporary” thread locker be used to secure the two M6 bolts that set both the pan and the tilt angles of the PT-10.
**NOTE:** Security bolts are available from One Systems for use in place of both the M5 and M6 bolts that are supplied with the PT-10

It is necessary to fit an additional safety assembly between the loudspeaker enclosure and the mounting surface. **This safety assembly is not supplied by One Systems**. The safety assembly must conform to local and national codes.

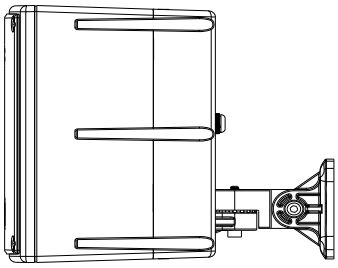

Figure 12

Secondary safety cables are STRONGLY recommended and should be secured to a structural point NOT associated with the PT bracket or loudspeaker.

## APPENDIX 1
## (Projected Area Values)

The values below should be supplied to the specific pole manufacturer for safety calculations. These values were determined by adding the projected areas of the high frequency horns, the woofer cones and ports to the cross sectional area of the front of each enclosure listed below.

103IM …… 67 in^2 (43,000mm^2)

106IM…… 136 in^2 (88,000mm^2)

108IM……..…250 in^2 (161,290mm^2)
(60x40 HF horn)

208CIM…… 207 in^2 (133,550mm^2)

112IM …….. 600 in^2 (387,096 mm^2)
(60x40 HF horn)

212CIM…… 600 in^2 (387,096mm^2)

212IM …….. 804 in^2 (550,000 mm^2)

312CIM…… 804 in^2 (550,000mm^2)

Cross Field Array…….. 2,708in^2 (1,750,000mm^2)

# RECTANGULAR VERSUS TRAPEZOIDAL ENCLOSURE SHAPES

Until the 1980's is was uncommon for loudspeaker enclosures to have a trapezoidal profile. The classic shape was rectangular. The rectangular geometry offered good internal volume and since low frequency response was proportional to internal volume, the greater the internal volume the greater the low frequency output.

In the 1980's the trend for loudspeaker arrays and "tight packing" generated the need for enclosure shapes that would pack closely together and still product the desired horizontal radiation patterns. (The technical merit of these arrays will not be discussed in this "white paper".) The trapezoidal enclosure shape gained popularity rapidly and almost totally replaced the conventional rectangular shape for most "professional" loudspeaker systems. The rational was that with a trapezoidal shape a user could construct a loudspeaker array if necessary. Unfortunately, the trapezoidal shape represented a compromise. Although the shape allowed groups of loudspeakers to be closely spaced into arrays, the geometry also represented a reduction of internal volume. So, low frequency response was compromised, and unless the enclosure was made taller or wider to offset the loss of volume the low frequency performance suffered.

After almost 30 years (It is hard to imagine that 1980 was almost 30 years ago!) it is time to revisit the basic shape of loudspeaker enclosures. The trapezoidal shape allows for easy and simple arrays that can be "tight packed" but suffers from reduced low frequency response. The rectangular enclosure, as compared to the trapezoidal shape, offers improved low frequency response but cannot be tight packed. The low frequency response can certainly be equalized in trapezoidal enclosures but equalization will reduce amplifier headroom and increase the low frequency transducer excursion. This increased excursion results in increased loudspeaker system distortion and reduced reliability.

So, what enclosure shape is "optimal"? The answer is relatively simple.

If a single enclosure is to be suspended, and this occurs far more frequently than arrays, then a rectangular shape is superior to a trapezoidal shape. If a single enclosure is suspended there is no reason to use a trapezoidal enclosure and sacrifice low frequency response.

At ONE SYSTEMS® we wanted to optimize system performance, not compromise so that one model could “do it all”. If an installation requires a single hang then why sacrifice the low frequency performance?

ONE SYSTEMS offers both trapezoidal enclosure geometries as well as rectangular geometries. If an application does not require an array, and most don’t, then we recommend the rectangular geometry.

This philosophy is illustrated in our 115TW and 115RW models. The 115TW is a trapezoidal geometry, hence the “T” reference in the name. The 115TW is designed for permanent installations where multiple 115TW’s are to be suspended in arrays. These arrays may be of multiple 115TW’s or also include 118Sub-W’s as well.

The 115RW consists of the same components and the height and width of the enclosure are identical to that of the 115TW but the enclosure geometry is rectangular. The 115RW offers additional low frequency output and can still be suspended. The 115RW is designed for single hangs or exploded arrays. (The 115RW also includes handles for portable applications).

This same philosophy applies to the ONE SYSTEMS 215RW. The 215RW is a 2 x 15 inch two way system. It is very unusual for 2 x 15 inch systems to be suspended in tight pack arrays so the enclosure geometry is rectangular. Again, the advantage, particularly in the case of the double 15 inch, is that the rectangular enclosure offers increased low frequency output. Like all ONE SYSTEMS enclosures, the 215RW may be suspended in single enclosure hangs or in exploded arrays. Because it is often common for 215 enclosures to be used in portable applications, the 215RW also includes handles.

ONE SYSTEMS offers both trapezoidal and rectangular geometries in selected models because optimizing performance is critical. All ONE SYSTEMS products may be suspended but not all installations require tight pack arrays so ONE SYSTEMS offers a choice to optimize the installation and not sacrifice performance.

**One Systems USA, Inc.** * 6204 Gardendale Dr. * Nashville, TN 37215
**One Systems Group Co. Ltd.** * European Division * Mittelsmoorer Strasse 12 * 28879 Grassberg German
**One Systems Global Co., Ltd**. * 87/114 Modern Town 15th Floor * Sukhumvit 63, Ekkamai Soi 3, Klongtoey, Bangkok, 1010 Thailand

# RIGGING AND SUSPENSION OF ONE SYSTEMS PRODUCTS

All ONE SYSTEMS® loudspeaker products are designed to be suspended. Each product has been carefully designed to provide maximum flexibility for a wide variety of applications. The internal rigging points and external rigging/flying accessories have all been carefully designed to offer a high degree of structural integrity. Each product, when suspended properly will provide safe and reliable long term operation.

Suspension of any product requires a complete understanding of not only the structural limitations of the products and its specific external rigging but also requires an understanding of the structural limitations of the mating surface. In addition, local, regional, and national codes may apply and these codes must also be understood and observed in order to insure a safe installation.

Because improper product suspension can result in personal injury or death, it is critical that products be suspended ONLY by persons experienced in proper and safe suspension techniques and methods. ONE SYSTEMS products should not be suspended without a complete knowledge of the relevant local and national codes and should ONLY be installed by a professional experienced in installing these types of products.

DO NOT ATTEMPT TO SUSPEND ONE SYSTEMS PRODUCTS WITHOUT READING THIS RIGGING MANUAL COMPLETELY.

DO NOT ATTEMPT TO SUSPEND ONE SYSTEMS PRODUCTS WITHOUT UNDERSTANDING EVERY ASPECT OF THIS MANUAL.

DO NOT ATTEMPT TO SUSPEND ONE SYSTEMS PRODUCTS WITHOUT UNDERSTANDING LOCAL AND NATIONAL CODES THAT APPLY TO OVERHEAD SUSPENSION OF PRODUCTS.

DO NOT ATTEMPT TO SUSPEND ONE SYSTEMS PRODUCTS UNLESS YOU ARE A PROFESSIONAL WITH KNOWLEDGE OF LOCAL AND NATIONAL

CODES RELATED TO SAFE SUSPENSION AND ARE EXPERIENCED IN SUSPENDING PRODUCTS OVERHEAD.

ONE SYSTEMS IS NOT RESPONSIBLE FOR FAILURES RELATED TO NON-COMPLIANCE WITH LOCAL AND NATIONAL CODES AND SAFE SUSPENSION PRACTICE.

# Safe Suspension of ONE SYSTEMS Products

Please read this entire manual. Please read every part of this manual and do not omit or delete any portions of this manual. Each statement contained in this manual is intended to assist the user in insuring a safe and reliable installation and, as a consequence, every part of this manual should be read and understood.
Please employ a professional rigger, one who is experienced in overhead suspension of products and is familiar with local and national codes related to overhead suspension of products. Codes may vary from country to country and each country's codes should completely understood prior to installation of these products.

This manual is NOT a substitute for a professional with experience and should not be used as a substitute for employing an experienced professional with knowledge of the appropriate local and national codes.

It is the responsibility of the user to insure that all local and national code have been observed and obeyed and that appropriate safe working limits have been observed.

# Secondary Safeties

All ONE SYSTEMS loudspeaker systems should be suspended using a secondary safety in addition to the main load bearing rigging/fly points. It is the responsibility of the user to insure that these secondary safeties have been properly installed where required by code.
It is highly recommended that secondary safeties be utilized even where local or national codes do not require such redundant safety devices.

# Safe Suspension Practices

Do not substitute any rigging or rigging accessories. Use only the parts and accessories supplied with ONE SYSTEMS products. Each rigging/suspension accessory has been tested by a certified laboratory and has been rated accordingly. Substitution will alter the rated safety factors and may result in reduced safety margins.

Do not modify any ONE SYSTEMS rigging/suspension accessory in any manner. Do not drill, file, sand, or otherwise modify any aspect of the loudspeaker, the associated rigging, or any other supplied accessory.

Do not install ONE SYSTEMS products in any manner except as shown in the product specific literature.

# Associated Rigging

The term “Associated Rigging” refers to any and all rigging not supplied by ONE SYSTEMS but used to suspend ONE SYSTEMS products. All associated rigging is the responsibility of others. This may include, but is not limited to, wire rope assemblies, beam clamps, shackles, etc. All associated rigging must conform to local and national codes and be rated for overhead suspension. All associated rigging should be specified by a professional engineer experienced in overhead suspension of products and familiar with local and national codes governing such products and applications.

# Installation to a mating surface

ONE SYSTEMS products are designed to be suspended from a “mating surface”. This surface may be a wall, ceiling, floor, or other structure. These mating surfaces must be capable of safely supporting both the weight of the ONE SYSTEMS loudspeaker enclosure, the additional weight of all ONE SYSTEMS rigging, and all associated rigging. In addition, the mating surface must be capable of supporting an additional force equal to that specified by all local and national codes.

The structural characteristics of mating surfaces can vary a great deal and significant care must be exercised when determining the suitability of a mating surface for attaching rigging or rigging points.

# Safety Factors

All ONE SYSTEMS products and rigging accessories are designed with a minimum 8:1 safety factor. The safe working load specified for each ONE SYSTEMS loudspeaker and rigging/suspension accessory should never be exceeded. The safe working load incorporates the 8:1 safety factor.

The mating surface must equal or exceed the rating of the overall system (loudspeakers and associated rigging) and must include a safety factor specified by local or national codes.

Each ONE SYSTEMS loudspeaker enclosure will have a specific safe working load rating. This product specific rating includes the maximum permissible total load on the rigging assembly.

It is appropriate to provide an explanation of the process that ONE SYSTEMS uses to rate their loudspeaker systems and accessories in order to illustrate the proper calculation of the maximum weight that may be suspended below any suspension accessory.

When a loudspeaker system and bracket assembly are tested they are pulled, at various angles until a “functional failure” is observed. This “functional failure” is not the same as a complete structural failure. A structural failure is the result of suspension components or any other structural components of the loudspeaker or rigging/suspension system actually breaking. This type of failure will result in the possibility of the loudspeaker falling and causing damage or serious injury and death. A “functional” failure occurs before a structural failure. A functional failure is described as any significant deformation or alteration of the loudspeaker structure or rigging/suspension hardware. The evaluation of a functional failure is very subjective but it always occurs prior to a structural failure. For this reason, ONE SYSTEMS uses functional failures to set a final rating.

ONE SYSTEMS testing procedures require the system under test also be tested to a structural failure and another evaluation is made that compares the magnitude of the force that separates the functional failure from the structural failure. This can be considered a type of “mechanical headroom” where a sufficient force is required between the functional limit and the final structural limit.

An example may be useful to illustrate how a final rating is achieved. A loudspeaker may be pulled to a force of 2000lbs (8896N) before a functional failure is observed. (This failure may be due to a separation of two of the loudspeaker wood panels or due to a force on a forged eye bolt that results in a permanent deformation of the bolt, etc). The loudspeaker under test will then continue to be pulled until a structural failure results. In this example, say the structural failure occurs at 2900 lbs (12899N).

The 8:1 safety factory is now applied to the functional failure (not to the structural failure). So, the functional failure of 2000lbs (8896N) is divided by 8, which results in a product rating of 250 lbs (1112N).

What this implies is that a total load of 250 lbs may be suspended from the top loudspeaker. If the loudspeaker in question weighs 120lbs (534N) then another loudspeaker, or any other object, with a total weight not exceeding the combined limit may be suspended.( NOTE, the weight of the additional rigging/suspension hardware must also be included in the overall equation. If a second 120lb loudspeaker were

suspended below the unit in this example, then the rigging used to suspend the second loudspeaker from the top loudspeaker could not exceed 10lbs (44.9N).

The example above is intended to illustrate how safe working limits are produced. The above example does not represent actual data or reflect any specific ONE SYSTEMS products.

# Inspection of Rigging

All enclosures and associated rigging should be inspected at least once a year. This inspection should be performed by an individual experienced in structural analysis and familiar with local and national codes. The purpose of this yearly inspection is to insure the integrity of each rigging point and to observe any signs of structural degradation in the enclosure and associated rigging.

# Warning

Suspending any object overhead is a serious undertaking and should never be attempted by those not experienced in this process. Products should not be suspended without a complete knowledge of local and national codes.

ALWAYS CONSULT A PROFESSIONAL EXPERIENCED IN OVERHEAD SUSPENSION OF OBJECTS.
ALWAYS CONSULT A PROFESSIONAL THAT UNDERSTANDS AND OBSERVES ALL LOCAL AND NATIONAL CODES.

**One Systems USA, Inc.** * 6204 Gardendale Dr. * Nashville, TN 37215
**One Systems Group Co. Ltd.** * European Division * Mittelsmoorer Strasse 12 * 28879 Grassberg German
**One Systems Global Co., Ltd**. * 87/114 Modern Town 15th Floor * Sukhumvit 63, Ekkamai Soi 3, Klongtoey, Bangkok, 1010 Thailand

# ONE SYSTEMS

# Technical Bulletin

April 29, 2009 (Supersedes prior editions)

## Sound Pressure Level (SPL) Ratings

Both one watt, measured at one meter, and maximum SPL, measured at one meter, are listed below for all One Systems enclosures. ***Caution should be exercised when comparing this data with that of products from other manufacturers.*** A sound reinforcement system that has a high one watt/one meter rating ONLY means it plays at a certain level with a specific power input. It does NOT mean that the system offers linear response, low distortion, or good time domain performance and balanced amplitude response.

***An even greater level of caution should be exercised when viewing maximum SPL data from any manufacturer***. This data is almost always derived by a simple piece of arithmetic that ASSUMES the system is totally linear. The typical max SPL data is calculated by taking the system power handling specification and the one watt/one meter specification and deriving the maximum SPL. Again, this ASSUMES that the system is completely linear…and this is never the case.

For this reason, it is possible to have a very high maximum SPL rating and have a system that is TOTALLY unintelligible. (but, very loud!)

One Systems products are designed to provide very linear response regardless of input power levels. All One Systems designs are optimized for excellent time domain response and fidelity. They are designed to be played at high power levels, and to project very high fidelity with highly intelligible program material over long distances for both outdoor and high ambient noise indoor environments.

### Full Range "Direct Weather" Injection Molded Speaker Systems

| Model | 1W/1M | MAX SPL |
|---|---|---|
| 103IM | 87dB | 104dB |
| 106IM | 89dB | 109dB |
| 108IM (105x60 and 60x40) | 92dB | 115dB |

*- continues on page 2 -*

## Full Range "Direct Weather" Injection Molded Speaker Systems (cont.)

| | | |
|---|---|---|
| 208CIM | 96dB | 122dB |
| 112IM (105x60 and 60x40) | 96dB | 125dB |
| 212CIM | 99dB | 130dB |
| 212IM | 99dB | 130dB |

## Full Range "Direct Weather" Fiberglass Speaker Systems

| Model | 1W/1M | MAX SPL |
|---|---|---|
| Cross Field Array | 105dB | 136dB |

## Full Range "Direct Weather" Baltic Plywood Speaker Systems

| Model | 1W/1M | MAX SPL |
|---|---|---|
| 112UM | 96dB | 125dB |
| 115UM | 96dB | 125dB |
| 115TW (105x60 and 60x40) | 96dB | 125dB |
| 115RW (105x60 and 60x40) | 96dB | 125dB |
| 215RW | 99dB | 130dB |

## Sub Woofer "Direct Weather" Baltic Plywood Speaker Systems

| Model | 1W/1M | MAX SPL |
|---|---|---|
| 212Sub-W | 97dB | 129dB |
| 118Sub-W | 95dB | 124dB |
| 218Sub-W | 98dB | 130dB |

March 19, 2008

# TRIPOD POLE MOUNTING
# 108IM AND 208CIM

One Systems™ offers two very versatile 8 inch two-way direct weather loudspeaker systems. The 108IM is an 8 inch two-way design that features the One Systems patent pending ETS driver and two versions of the ETS high frequency rotate-able horn. The 208CIM is a dual 8 inch design in a two-element vertical array, designed to provide high output and improved vertical coverage through the vocal fundamental range.

Both the 108IM and 208CIM are capable of being tripod pole mounted. Tripod pole mounting these systems will allow excellent intelligibility and coverage for both temporary and permanently installed outdoor applications, even in inclement weather situations. Of course, because One Systems products offer excellent broad band intelligibility, the enclosures are ideally suited for indoor applications as well.

One Systems recommends the Ultimate Support™ model BMB-200K pole mounting bracket. Alternative pole mounting brackets should NOT be substituted and ONLY the BMB-200K is approved for pole mounting the 108IM and 208CIM.

The BMB-200K may be mounted to either the bottom or top of the enclosure using two M8 (1.25 pitch) stainless steel machine screws. The length should be 30mm. Stainless steel is required for outdoor installation and is recommended for strength. Lock washers or temporary thread locker is required for safe operation.

Note: All associated rigging is the responsibility of the installer or facility users and is not the responsibility of One Systems, Inc. Please observe all local and national codes, as well as safe mounting practices for overhead mounting.

Figure 1 below represents the two M8 locations for mounting the BMB-200K. The BMB-200K should be mounted as far forward, toward the front of the enclosure, as possible.

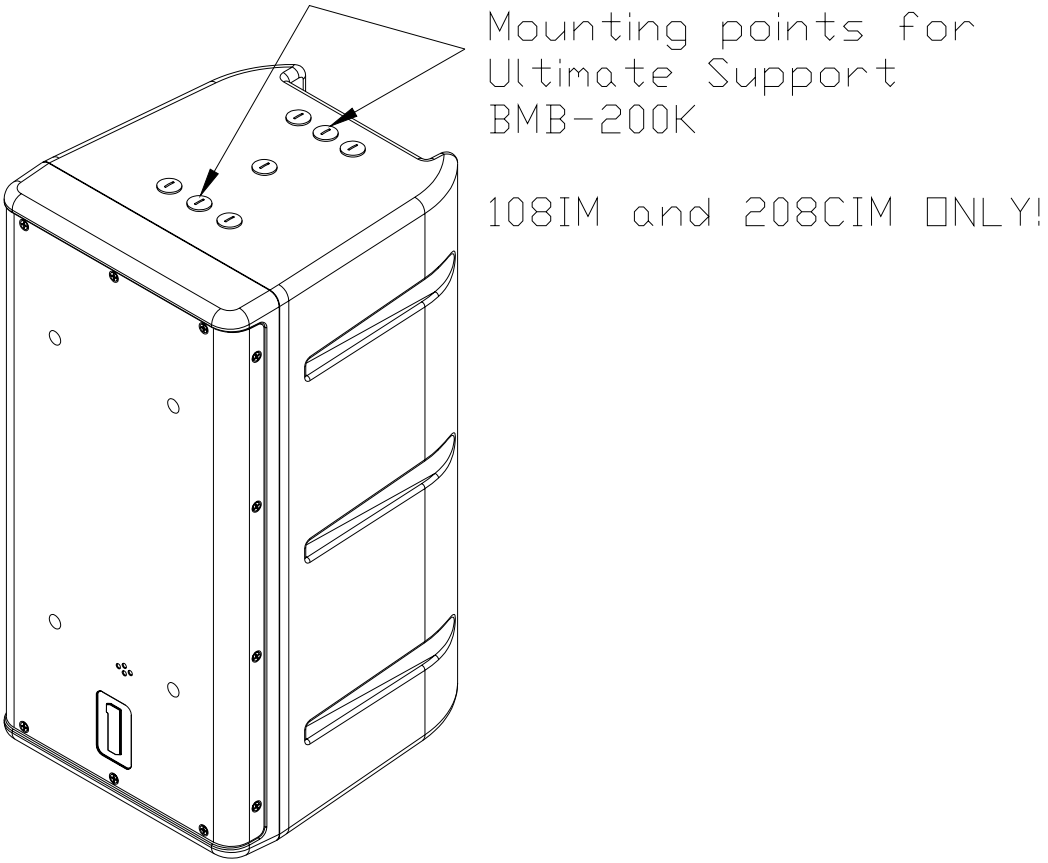


Figure 1
Pole mount bracket locations

# ONE SYSTEMS “U” Bracket Installation

ONE SYTEMS offers a variety of “U” brackets for use with its loudspeaker systems. “U” brackets provide an easy way to achieve a vertical or horizontal wall mounting or a ceiling parallel mount for loudspeaker systems.

The following ONE SYSTEMS may be mounting using a “U” bracket.

112IM

212IM

212CIM

108IM

208CIM

112UM

115TW

WARNING: Please read and understand all portions of the “Rigging and Suspension of ONE SYSTEMS Products” article. (www.ONESYSTEMS.COM)

WARNING: All local and national codes must be observed when suspending this product. Consult a professional rigger and structural engineer experienced in suspension of these products. Consult a professional rigger familiar with the appropriate local and national codes.

WARNING: All mating surfaces (i.e. walls, ceiling, etc) must be capable of supporting the “U” bracket and loudspeaker weight and associated safety factors as required by local and national codes.

WARNING: Do not substitute the specific “U” bracket. Do not use the specific “U” bracket on any enclosure except for the enclosure specified. Do not suspend the enclosure with any “U” bracket except for the specified “U” bracket.

WARNING: All associated rigging the responsibility of others.

# INSTALLATION INSTRUCTIONS

**112IM and 212CIM**

1. See the product view below.

2. Remove the two M10 plastic covers from the positions as shown.

3. Attach the rubber washers (1 each) over each mounting hole. One each side as shown.

4. Mount the 112IM-U “U” bracket to the wall or ceiling surface. Insure that the bracket is properly and securely mounted and is capable of supporting the necessary weight to achieve a safe working load. This must be done by a professional rigger or structural engineer familiar with all local and national codes.

WARNING: Do not hang or otherwise suspend any other objects from the loudspeaker and “U” bracket assembly!

5. Position the 112IM or 212CIM enclosure between the “U” bracket ends. Install the two M10 bolts, flat washer and lock washers, one set on each side. This operation should be performed by at least two people. Once the enclosure is safely mounted, adjust to the desired angle and tighten the M10 bolts.

**212IM**

1. See product view below (Figure 1)

2. Remove the two plastic covers from the positions.

3. Attach the rubber washers (1 each) over each mounting hole as shown.

4. Mount the 212IM-U “U” bracket to the wall or ceiling surface. Insure that the bracket is properly and securely mounted and is capable of supporting the necessary weight to achieve a safe working load. This must be done by a professional rigger or structural engineer familiar with all local and national codes.

WARNING: Do not hang or otherwise suspend any other objects from the loudspeaker and “U” bracket assembly!

5. Position the 212IM between the “U” bracket ends. Install the two M10 bolts, flat washers and lock washers, one each side as shown in Figure 3. This operation should be performed by at least two people. Once the enclosure is safely mounted, adjust to the desired angle and tighten the M10 bolts.

**112UM**

1. See the product views below.

2. Remove the two M10 bolts from the positions as shown.

3. Attach the rubber washers (1 each) over each mounting hole as shown.

4. Mount the 112UM-U “U” bracket to the wall or ceiling surface. Insure that the bracket is properly and securely mounted and is capable of supporting the necessary weight to achieve a safe working load. This must be done by a professional rigger or structural engineer familiar with all local and national codes.

WARNING: Do not hang or otherwise suspend any other objects from the loudspeaker and “U” bracket assembly!

5. Position the 112UM between the “U” bracket ends. Install the two M10 bolts, flat washers and lock washers, one set on each side. This operation should be performed by at least two people. Once the enclosure is safely mounted, adjust to the desired angle and tighten the M10 bolts.

**115TW**

1. See the product views below.

2. Remove the two M10 bolts from the positions as shown.

3. Attach the rubber washers (1 each) over each mounting hole as shown.

4. Mount the 115TW-U “U” bracket to the wall or ceiling surface. Insure that the bracket is properly and securely mounted and is capable of supporting the necessary weight to achieve a safe working load. This must be done by a professional rigger or structural engineer familiar with all local and national codes.

WARNING: Do not hang or otherwise suspend any other objects from the loudspeaker and “U” bracket assembly!

5. Position the 115TW between the “U” bracket ends. Install the two M10 bolts, flat washers and lock washers, one set on each side.This operation should be performed by at least two people. Once the enclosure is safely mounted, adjust to the desired angle and tighten the M10 bolts.

**108IM/208CIM**

1. Remove the two plastic plugs from the position shown below, one plug from the top of the enclosure and the second plug from the bottom of the enclosure.

NOTE: The “U” bracket MUST be mounted to the rigging points shown below. DO NOT USE THE OTHER M10 LOCATIONS FOR MOUNTING THE “U” BRACKET!

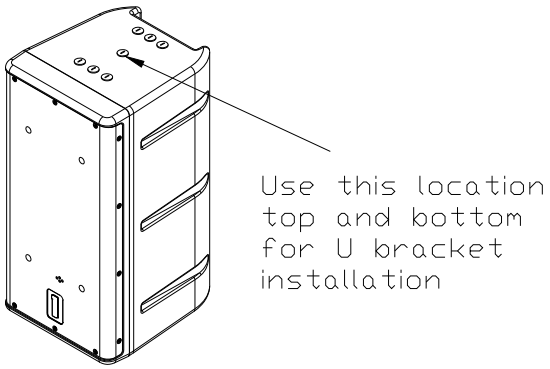


2. Place the rubber washers over the top and bottom “U” bracket mounting holes

3. Mount the 108IM-U “U” bracket to the wall or ceiling surface. Insure that the bracket is properly and securely mounted and is capable of supporting the necessary weight to achieve a safe working load. This must be done by a professional rigger or structural engineer familiar with all local and national codes.

WARNING: Do not hang or otherwise suspend any other objects from the loudspeaker and “U” bracket assembly!

4. Position the 108IM or 208CIM between the “U” bracket ends. Install the two M8 bolts, flat washers and lock washers, one set on each side.This operation should be performed by at least two people. Once the enclosure is safely mounted, adjust to the desired angle and tighten the M8 bolts.

**One Systems USA, Inc.** * 6204 Gardendale Dr. * Nashville, TN 37215
**One Systems Group Co. Ltd.** * European Division * Mittelsmoorer Strasse 12 * 28879 Grassberg German
**One Systems Global Co., Ltd**. * 87/114 Modern Town 15th Floor * Sukhumvit 63, Ekkamai Soi 3, Klongtoey, Bangkok, 1010 Thailand